Brine/Water
Optiheat Inverta Economy Compact

OH I 9ec

Technical Manual

AC Cooling Heating

Table of contents

Technical data **4**
OH I 9ec, brine/water with controller Optiplus 3 4

Dimension drawings **6**
OH I 9ec with controller Optiplus 3 6

Power curves **8**
OH I 9ec brine/water with controller Optiplus 3 8

Heat output **10**
OH I 9ec brine/water with controller Optiplus 3 10

Cooling output **11**

Application limits **12**

Volume flow and pressure loss circulation pump **14**

Standard values geothermal probes **16**
Geothermal probes OH I 9ec (standard values) 16

Function description **17**

Basic concepts/extensions **18**
01.00.10 18
01.00.10 E5 19
01.20.10 20
01.20.10 E5 21
01.20.10 E42 22
01.20.10 E5 E42 23
02.00.10 24
02.00.10 E8 25
02.00.10 E1 26
02.00.10 E1 E8 27
02.00.10 E2 28
02.00.10 E2 E8 29
02.00.10 E6 30
02.00.10 E6 E8 31
02.20.10 32
02.20.10 E8 33
02.20.10 E1 34
02.20.10 E1 E8 35
02.20.10 E6 36
02.20.10 E6 E8 37
02.20.10 E2 38
02.20.10 E2 E8 39
02.20.10 E2 E6 40
02.20.10 E2 E6 E8 41
02.20.10 E42 42
02.20.10 E8 E42 43
02.20.10 E6 E42 44
02.20.10 E6 E8 E42 45
02.20.10 E1 E42 46
02.20.10 E1 E8 E42 47
02.20.10 E2 E42 48
02.20.10 E2 E8 E42 49

Table of contents

02.20.10 E2 E6 E42	50
02.20.10 E2 E6 E8 E42	51
02.30.10	52
02.30.10 E8	53
02.30.10 E1	54
02.30.10 E1 E8	55
02.30.10 E2	56
02.30.10 E2 E8	57
02.40.10	58
02.40.10 E6	59
02.40.10 E8	60
02.40.10 E1	61
02.40.10 E1 E8	62
02.40.10 E2	63

Technical data
Optiheat Inverta Economy Compact

OH I 9ec, brine/water with controller Optiplus 3

Heat pump type			**OH I 9ec**		
Model			**Economy**		
Controller Optiplus			**integrated**		
WPZ-test number			**SW-370-16-04**		
Standard performance data (as per EN 14511:2013, part load oper. 50 Hz)			**W 35**	**W 45**	**W 55**
Heat output	at B0	kW	8.8	8.4	7.9
Power range	min./max.	kW	5.0 - 18.5	5.0 - 17.5	4.5 - 16.5
COP	at B0	-	4.9	3.7	2.8
El. power consumption	at B0	kW	1.8	2.3	2.8
Cooling output	at B0	kW	7.0	6.2	5.1
Standard performance data (as per EN 14511:2013, part load oper. 40 Hz)			**W 35**	**W 45**	**W 55**
Heat output	at B0	kW	7.2	6.9	6.4
COP	at B0	-	5.2	3.9	3.0
El. power consumption	at B0	kW	1.4	1.7	2.1
Cooling output	at B0	kW	5.8	5.1	4.3
Standard performance data (as per EN 14511:2013, part load oper. 60 Hz)			**W 35**	**W 45**	**W 55**
Heat output	at B0	kW	10.6	10.1	9.4
COP	at B0	-	4.8	3.7	2.9
El. power consumption	at B0	kW	2.2	2.7	3.3
Cooling output	at B0	kW	8.4	7.4	2.9
Energy class / Performance data (average climatic conditions)					
Energy efficiency class 35°C / 55°C			A+++/A+++		
Rated thermal output Prated 35°C / 55°C		kW	15.2/14.1		
Energy efficiency ηS 35°C / 55°C		%	207/151		
SCOP (according to EN 14825) 35°C / 55°C			5.39/3.98		
Sound (at B0/W55)					
Sound power level [2]	Lwa	dB(A)	48		
Sound pressure level in 1 m [3]	Lpa	dB(A)	33		
Field of application/application limits					
Heat source temperature	min./max.	°C	-6 / +20		
Heat flow temperature [4] [5]	min./max.	°C	+25 / +65		
Vaporiser, brine side (at B0/W35)			**min.**	**nom.**	**max.**
Volume flow minimum / nominal (ΔT 3K EN 14511) / maximum		m³/h	1.0	2.2	4.2
Pressure drop via heat pump		kPa	2.0	7.0	20.0
Free compression [5]		kPa	116.0	106.0	59.0
Medium water / ethylene glycol		%	75 / 25		
Built-on brine pump			UPMXL GEO 25-125		
Condenser, heater side (at B0/W35)			**min.**	**nom.**	**max.**
Volume flow minimum / nominal (ΔT 5K EN 14511) / maximum		m³/h	0.4	1.5	3.0
Pressure drop via heat pump		kPa	1.0	6.0	13.0
Free compression [5]		kPa	102.0	94.0	68.0
Medium water		%	100		
Built-on heating pump			UPML 25-105		

1) Energy class for climate area medium / space heating low temperature application
2) As per EN9614-2 and EN12102
3) Sound pressure = free field value
4) Continuous operation +55°C; +60°C at source temperature < 0°C or > 15°C and reduced heat output
5) Free compression at highest pump rotation speed, pumps output-regulated

Observe local conditions and regulations.

OH I 9ec, brine/water with controller Optiplus 3

Dimensions/connections/miscellaneous

Dimensions	D × W × H	mm	700 × 530 × 1260
Total weight		kg	165
Heating circuit connection	AG	Inch	1 1/2"
Heat source connection	AG	Inch	1 1/2"
Cooling agent / filling quantity		-- / kg	R-410A / 2.7
GWP / CO_2e		-- / t	2090 / 5.6
Refrigeration oil filling quantity		l	0.9
Expansion vessel heating [3)]	V	l	SD 80.3
Set pre-pressure heating circuit	p	bar	1.0
Expansion vessel brine circuit	V	l	SD 35.3
Set pre-pressure heating brine circuit	p	bar	0.5
Safety valve (brine/heating)	p	bar	3.0

Electrical data

Operating voltage			3L / N / PE / 400 V / 50 Hz
External fuse protection unit		AT	25 "C"
External fuse protection without circulation pumps		AT	20 "C"
Max. machine current		A	15
Starting current (soft start speed control)		A	12
Protection class		IP	20
Max. power consumption compressor		kW	7.0
Max. power consumption circulation pumps		kW	0.5
Max. power consumption total		kW	7.5
Heating pump outlets [6)]			L / N / PE, PWM
Source pump outlets [6)]			L / N / PE, PWM

3) Expansion vessels are included
6) Max. current consumption per pump 2 A

Observe local conditions and regulations.

Dimension drawings
Optiheat Inverta Economy Compact

OH I 9ec with controller Optiplus 3

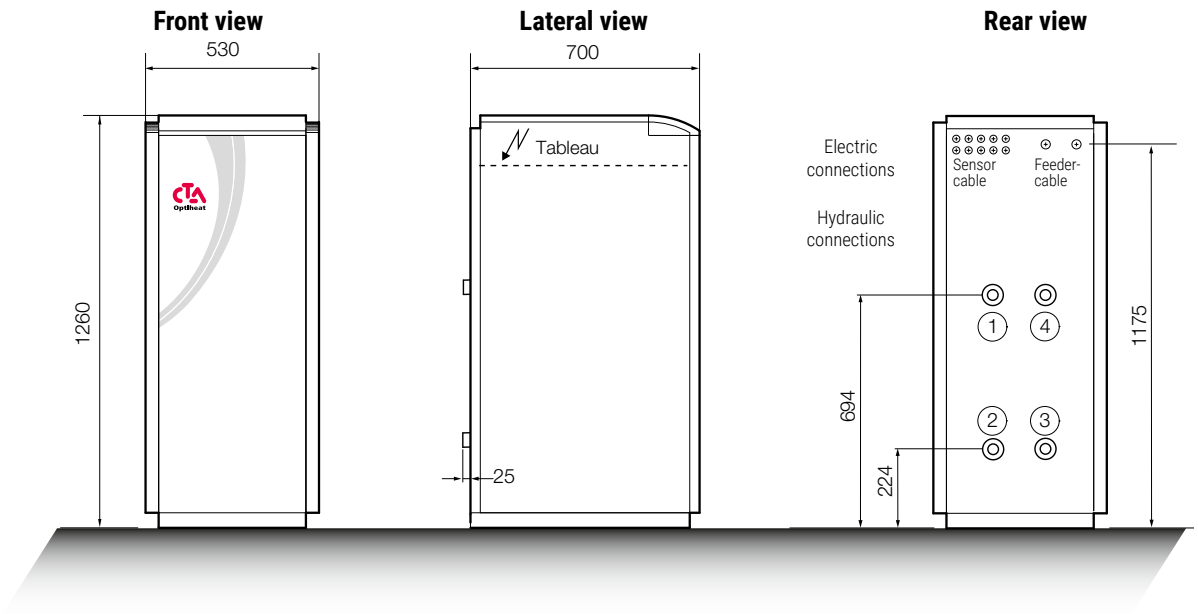

Layout

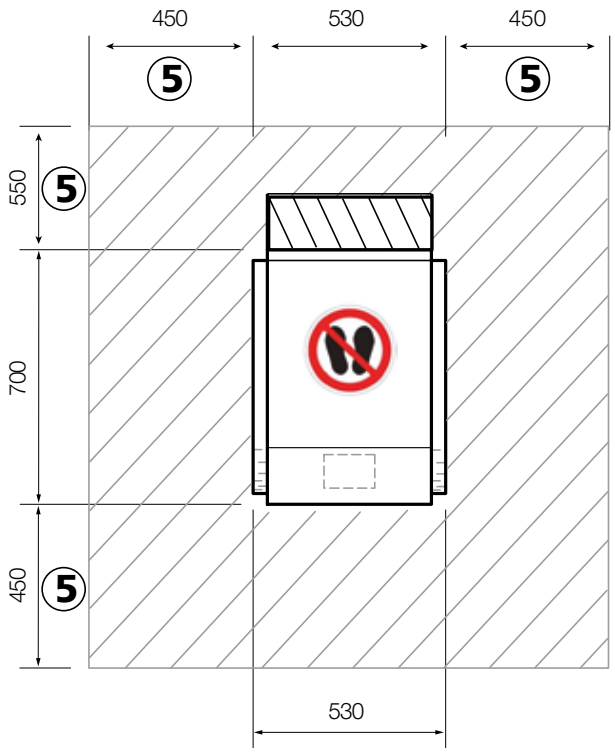

Legend

1 Heating water outlet
2 Heating water inlet
3 Heat source outlet
4 Heat source inlet
5 Minimum distances

All dimensions are in mm

The external sensor (QAC 34/101) and the documents are enclosed in the electric panel.

Power curves
Optiheat Inverta Economy Compact

OH I 9ec brine/water with controller Optiplus 3

Volume flow source minimum / nominal (ΔT 3K EN 14511) / maximum 1.0 / 2.2 / 4.2 m³/h
Volume flow heater minimum / nominal (ΔT 5K EN 14511) / maximum 0.4 / 1.5 / 3.0 m³/h

Performance specifications as per EN 14511

Heat output in kW at B0/W35

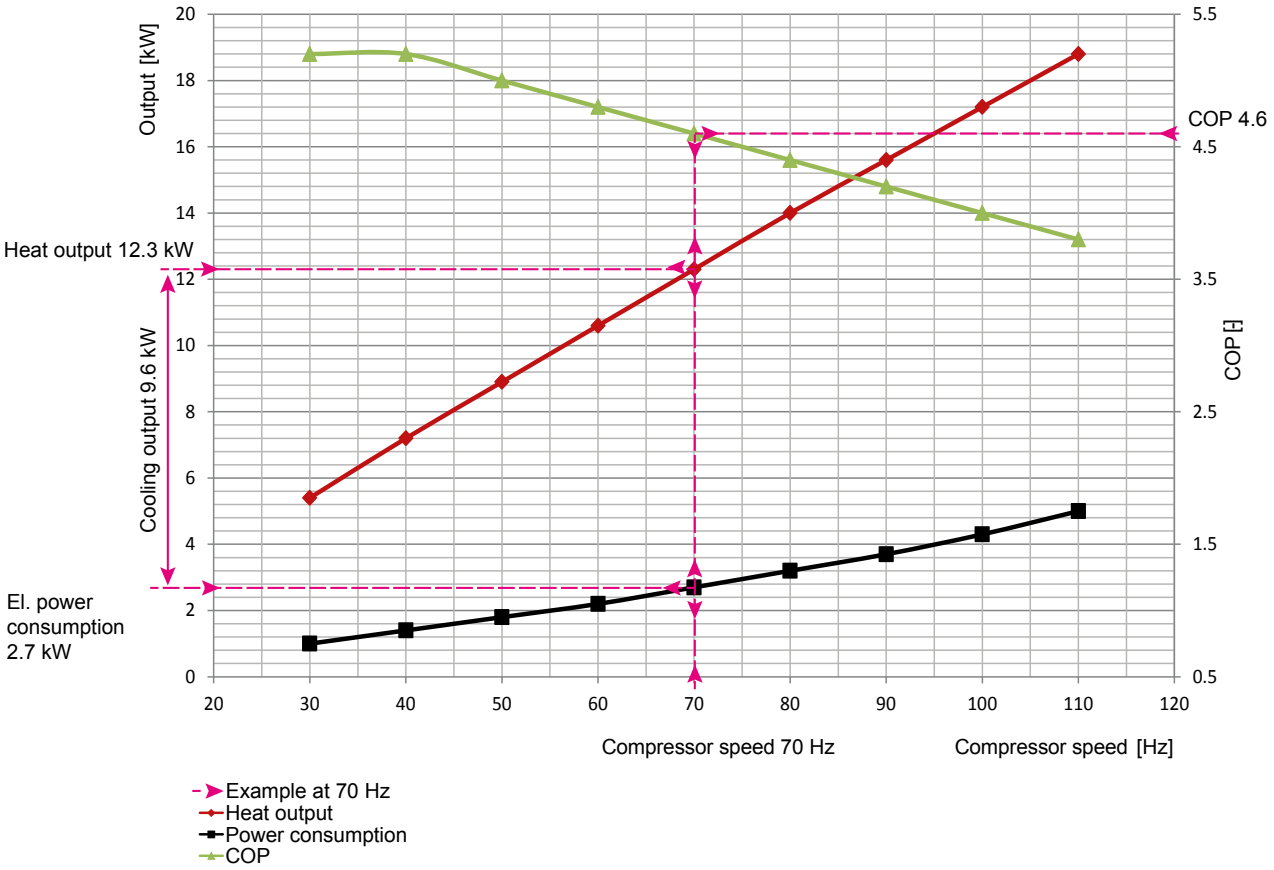

Power curves
Optiheat Inverta Economy Compact

OH I 9ec brine/water with controller Optiplus 3

Heat output in kW at B0/W45

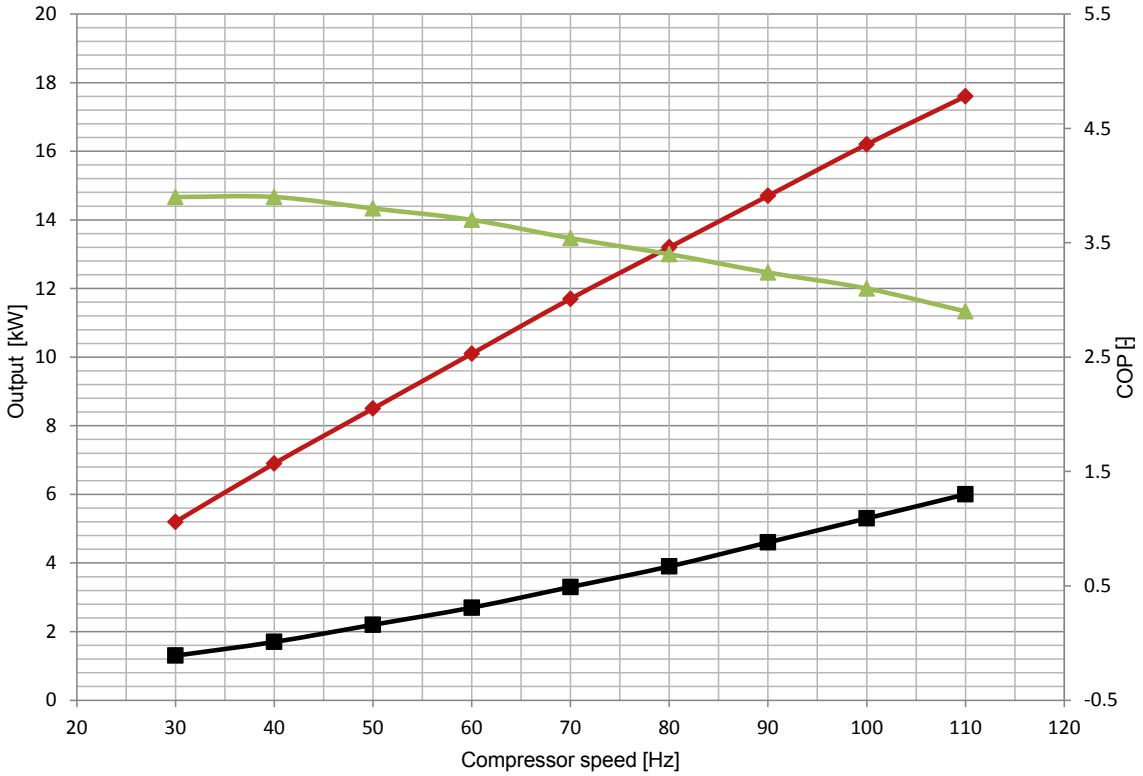

Heat output in kW at B0/W55

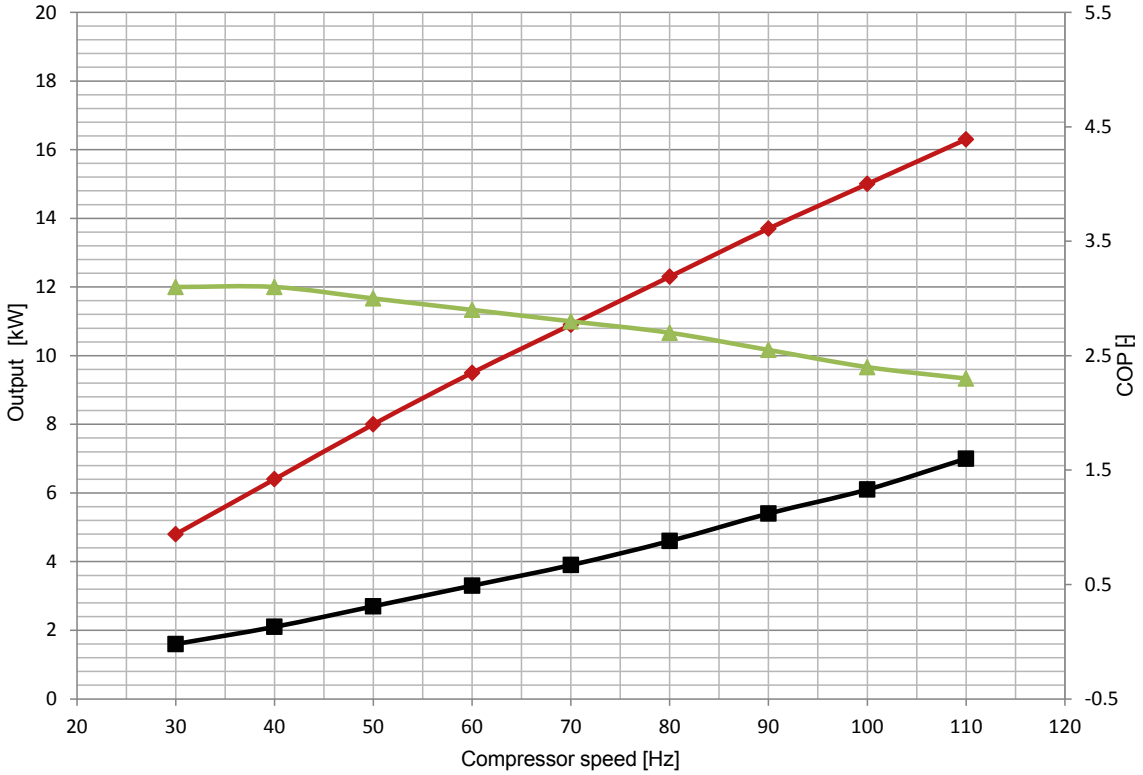

Heat output
Power consumption
COP

Heat output
Optiheat Inverta Economy Compact

OH I 9ec brine/water with controller Optiplus 3

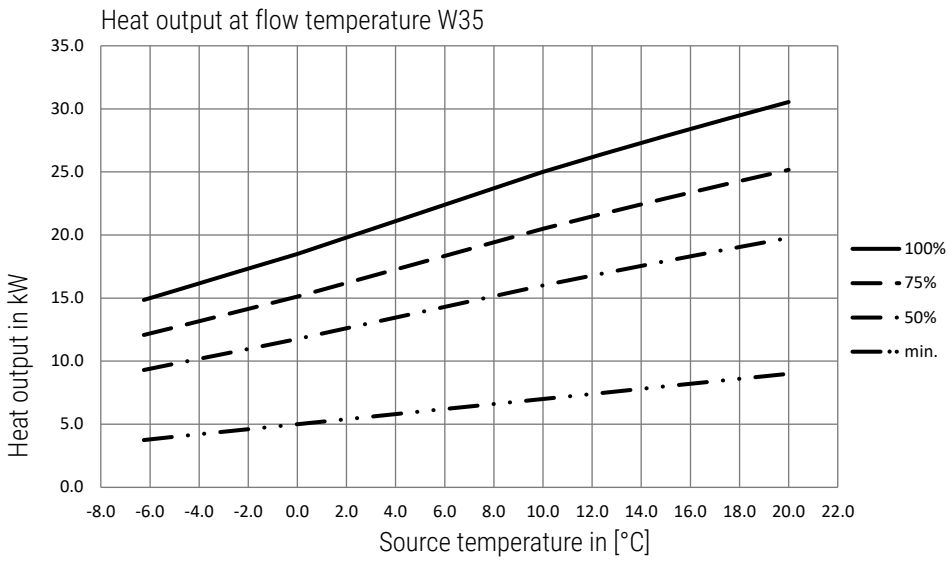

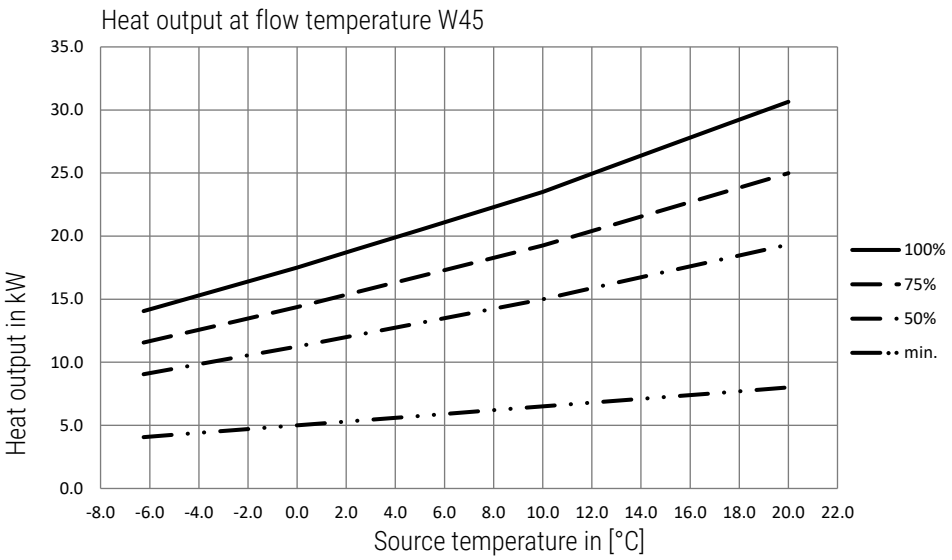

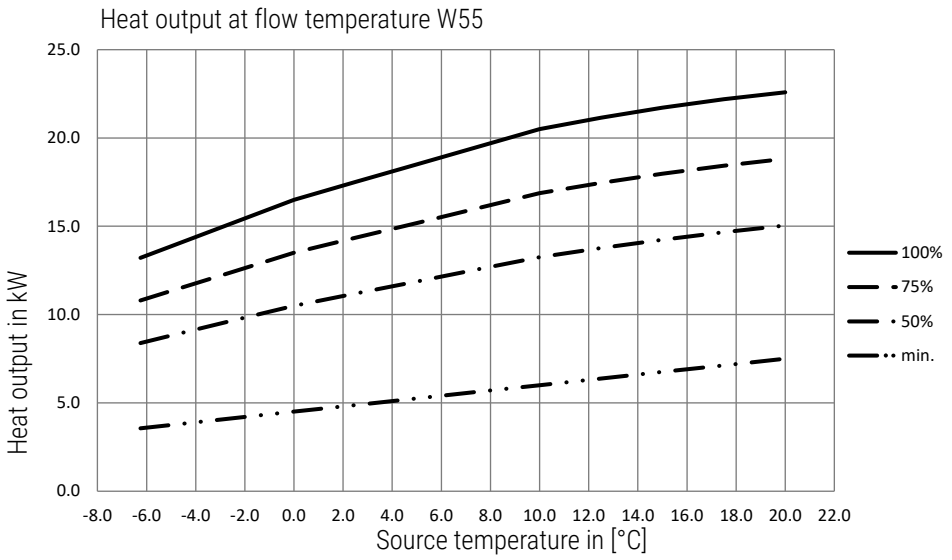

Cooling output
Optiheat Inverta Economy Compact

OH I 9ec brine/water with controller Optiplus 3

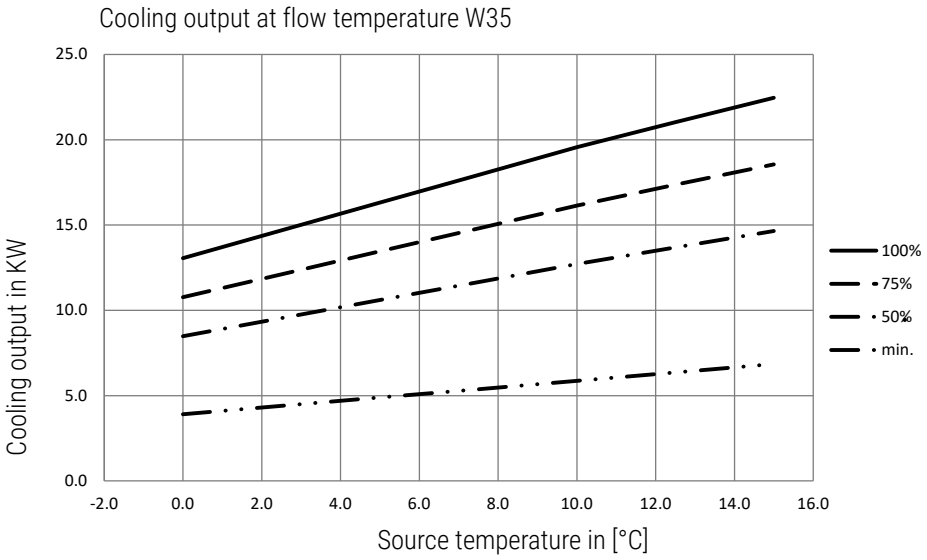

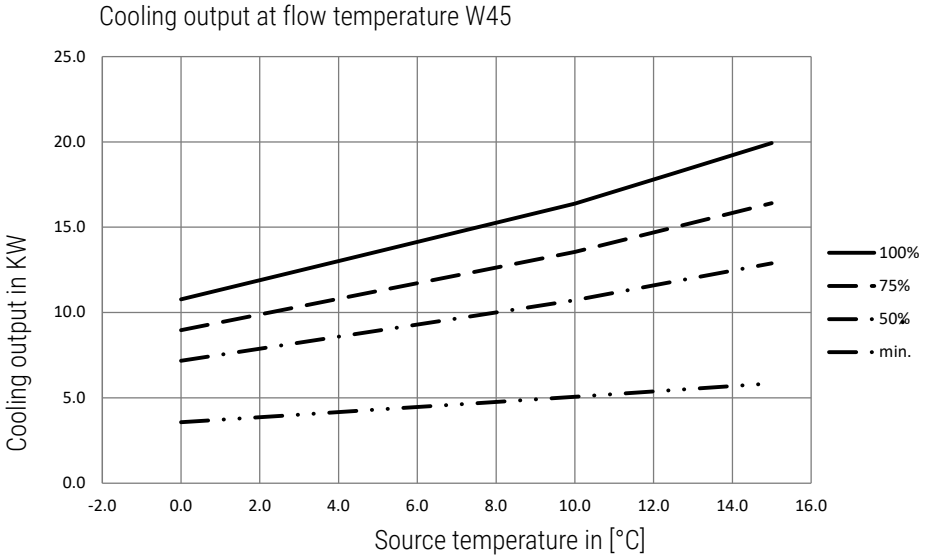

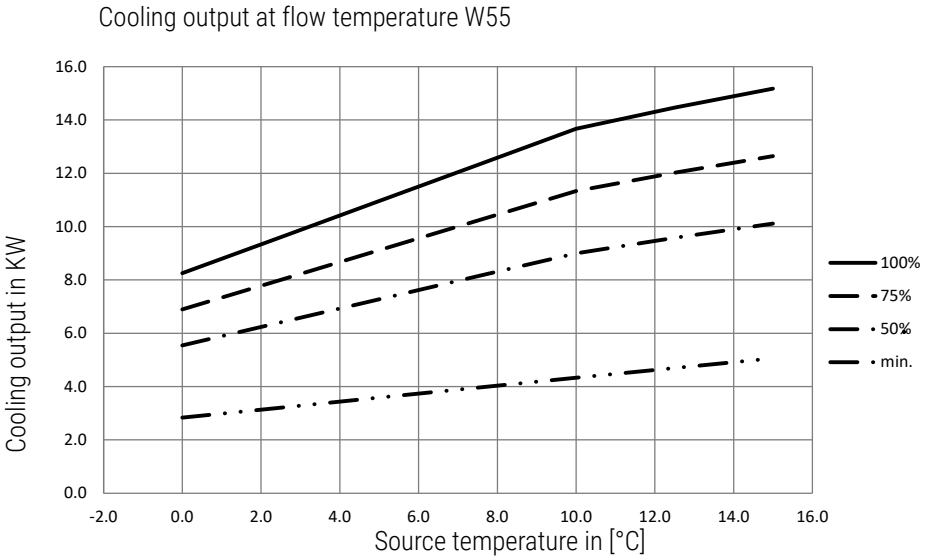

Application limits
Optiheat Inverta Economy Compact

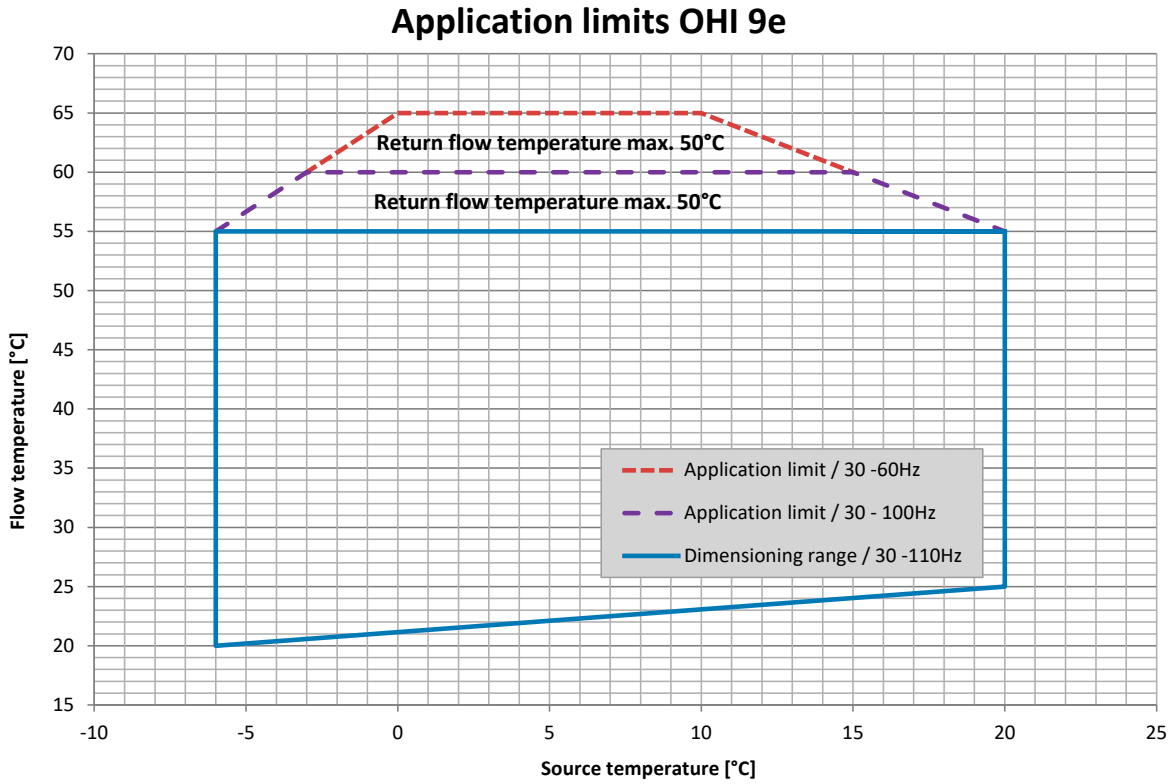

Volume flow and pressure loss circulation pump Optiheat Inverta Economy Compact

OH I 9ec brine/water with controller Optiplus 3

Heat source / vaporiser

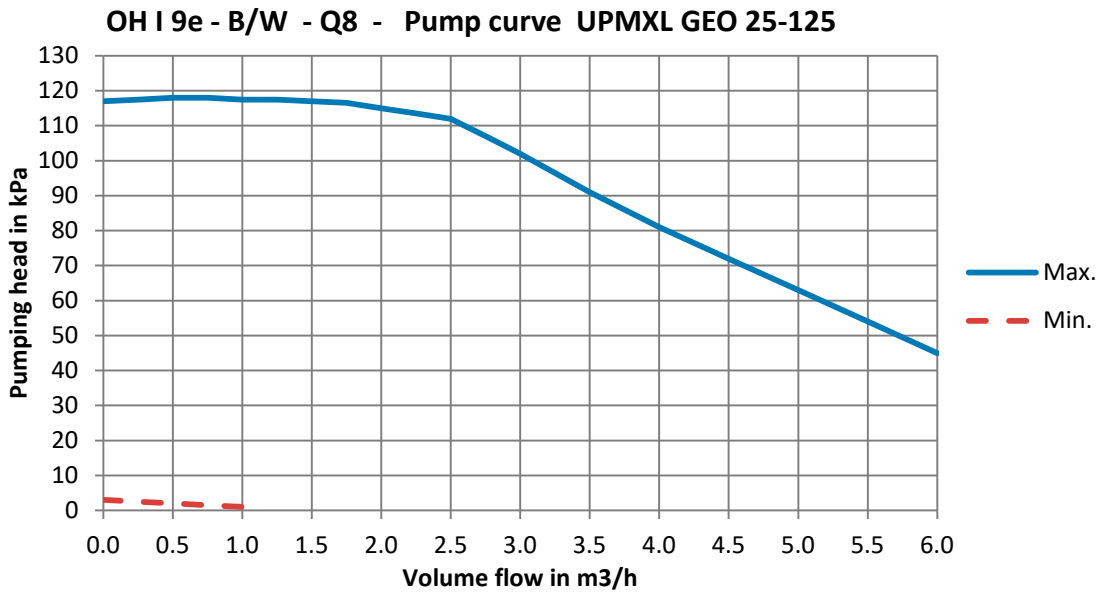

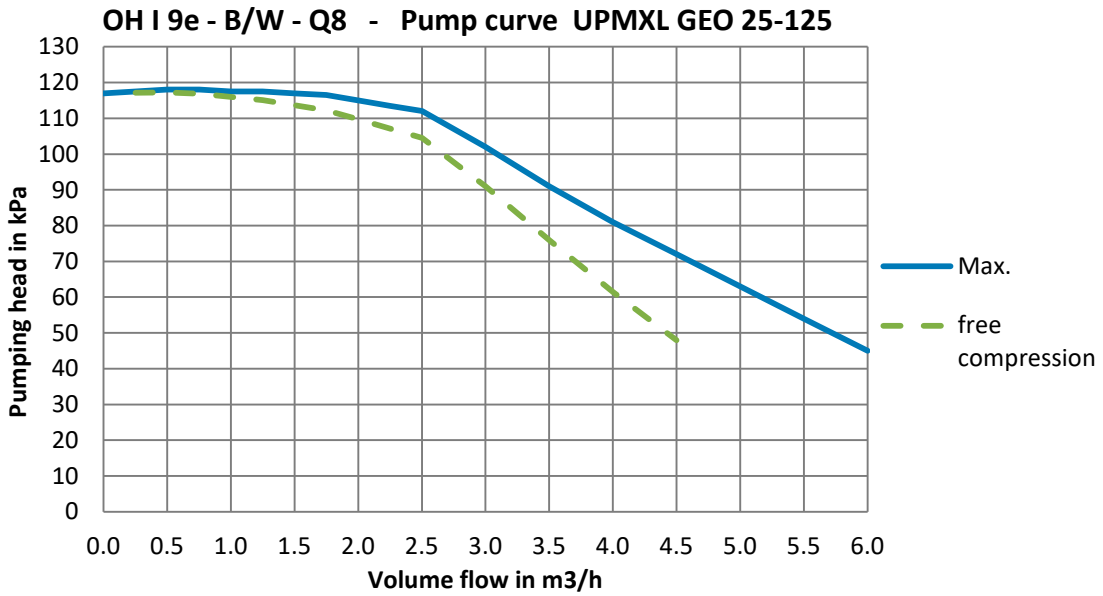

Volume flow and pressure loss circulation pump Optiheat Inverta Economy Compact

OH I 9ec brine/water with controller Optiplus 3

Heating side / condenser

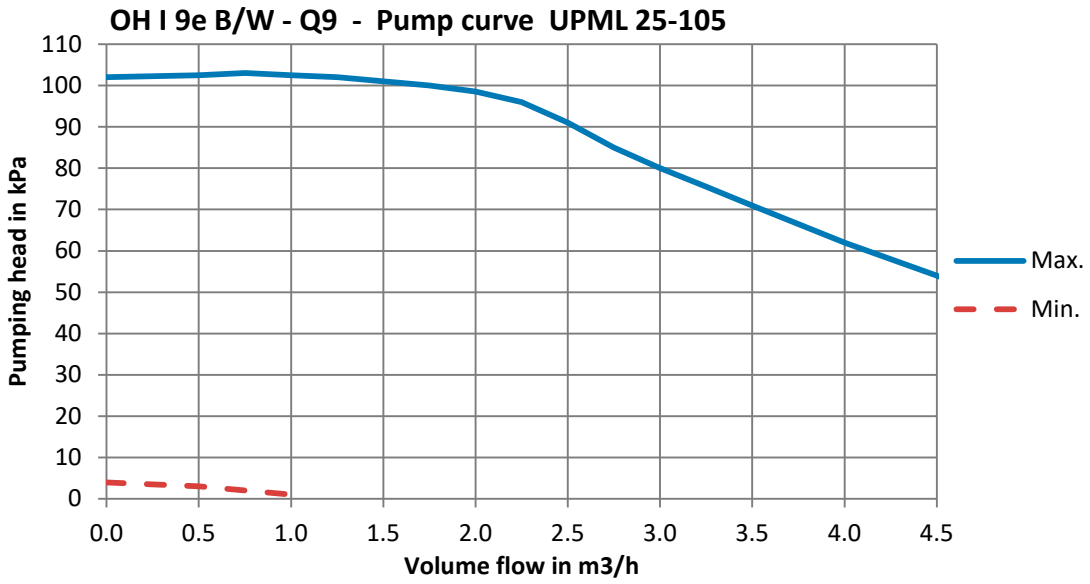

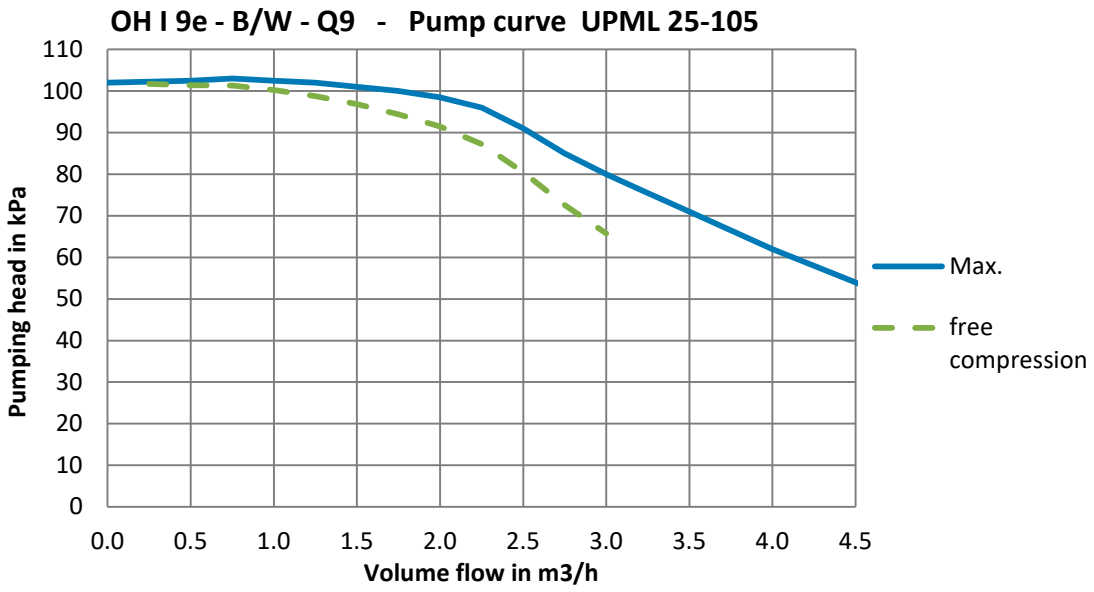

Standard values geothermal probes
Optiheat Inverta Economy Compact

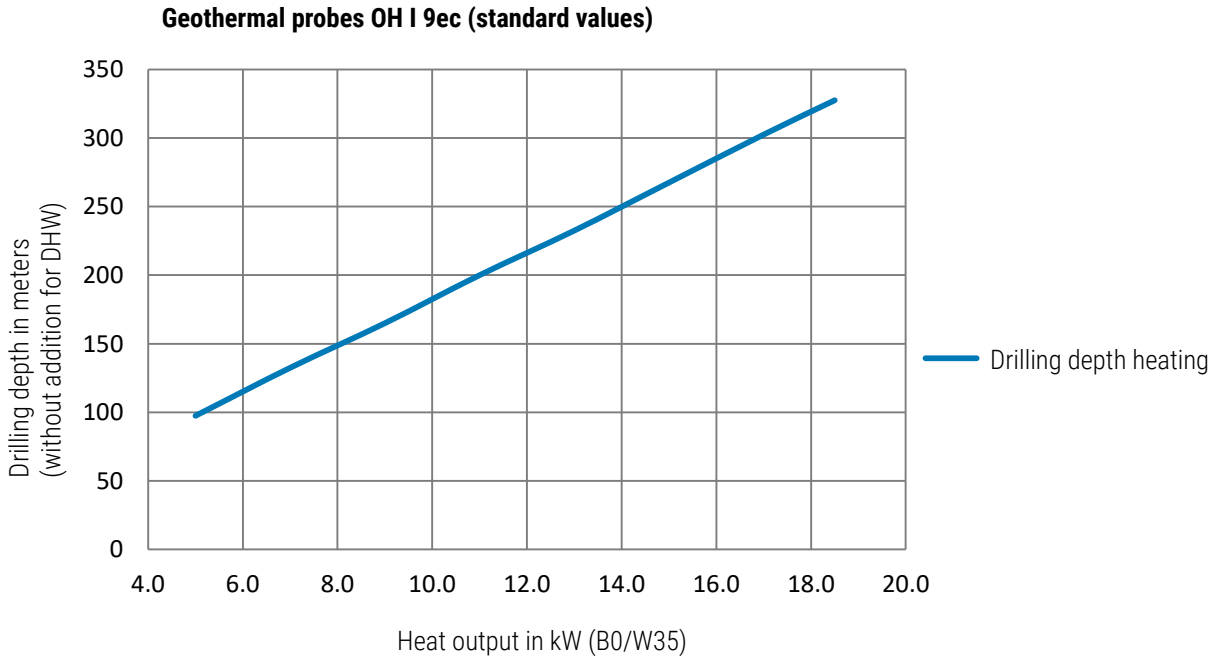

ADVICE Note on drilling depth: The geothermal probe surcharge for the hot water requirement per day is **not** included.
Surcharge per 100 litres approx. 15 metres

Function description

Heat pump

Start the heat pump via the external temperature sensor B9. Depending on the hydraulic integration, this works directly on the buffer storage or directly in the heating circulation. Depending on the heat demand, the heat pump is switched on and off via the temperature sensors B4/B41 or B71.

The heat pump has a restart delay in order to prevent wobbling. In case of direct heat operation (e. g. underfloor heating), the condenser pump Q9 is in operation during the entire heating period.

DHW charging

DHW is charged according to the time program to the respective setpoint value. Charge is released via the temperature sensor B3, and the deflector valve Q3 is switched. The electrical heating element K6 in the DHW storage is released by the heat pump controller (further release necessary).

An external heat exchanger is used for DHW storage without internal register. Two additional temperature sensors B31 and B36 must be installed for controlling the intermediate circuit pump Q33.

Buffer storage

If a buffer storage is used in the hydraulic system, the heat generator side and consumer side are decoupled. The storage is used to bridge heat generator locks. The setpoint value of the storage is calculated by the maximum demand of the consumer groups.

Discharge control

The setpoint value for the heating flow is calculated with the current outside temperature and the set heating curve. The discharge control adjusts the flow temperature B1 with the mixing valve Y1 to this setpoint value. The discharge pump Q2 is in operation during the entire heating period.

Free cooling

For passive cooling, cooling is done without operating a cooling generator. Heat is returned to the connected source (soil sensor or ground water).
For cooling requirement, the source circuit is controlled by means of the deflector valves Y28 and Y21 (in case of mixed discharge group) via the plate heat exchanger (PWT).

The heat pump controller runs a cooling curve via the external temperature B9, this is controlled with the mixer Y1 and the flow temperature B1. For available room thermostat valves, these must be adaptable for the cooling as well as the heating operation.

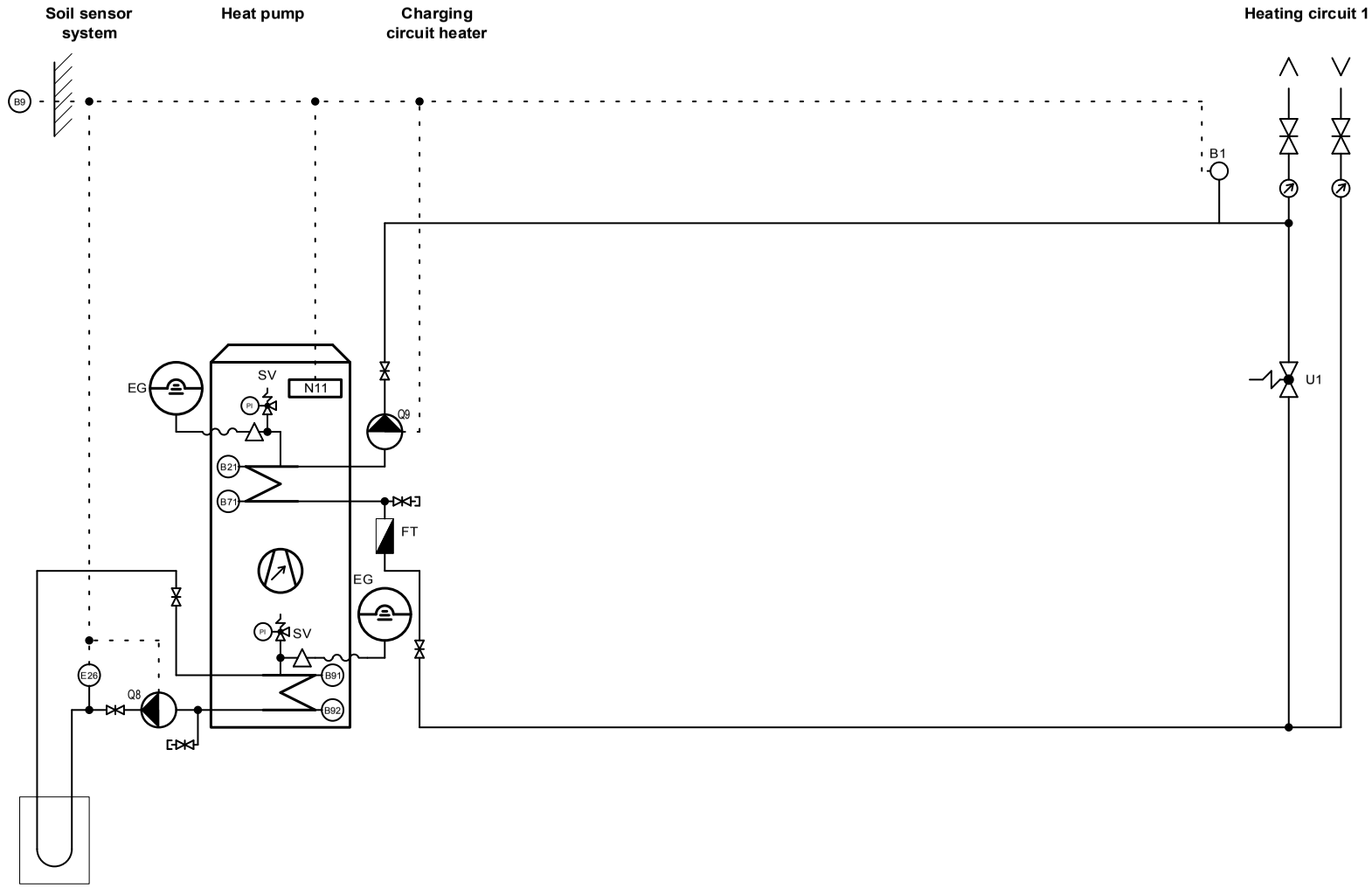

Legend

B1	Flow temperature sensor heating circuit	**Q9**	Condenser pump
B21	Flow temperature sensor heat pump	**U1**	Overflow valve
B71	Return flow temperature sensor heat pump		
B9	External temperature sensor		
B91	Brine inlet temperature sensor		
B92	Brine outlet temperature sensor		
EG	Expansion vessel		
E26	Brine pressure controller		
FT	Flow rate sensor		
N11	Heat pump controller		
PI	Pressure gauge		
Q8	Brine pump		

				DATE	03/2018
				DESIGNER	KAF
				Proved	SW
RESPONSIBLE	CHANGE	DATE	DESIGNER	Standard	SIA 410

OH Inverta Compact 01.00.10

Subject to technical changes.

- Installation of additional components as per local regulations and conditions.
- This presentation is used as planning aid for the concerned installer.

PROJECTproject STANDARD

NAME OF DRAWING OH_I_Compact

Anlage | Funktion | Seite 1

Project Manager PM

No. pgs. 106

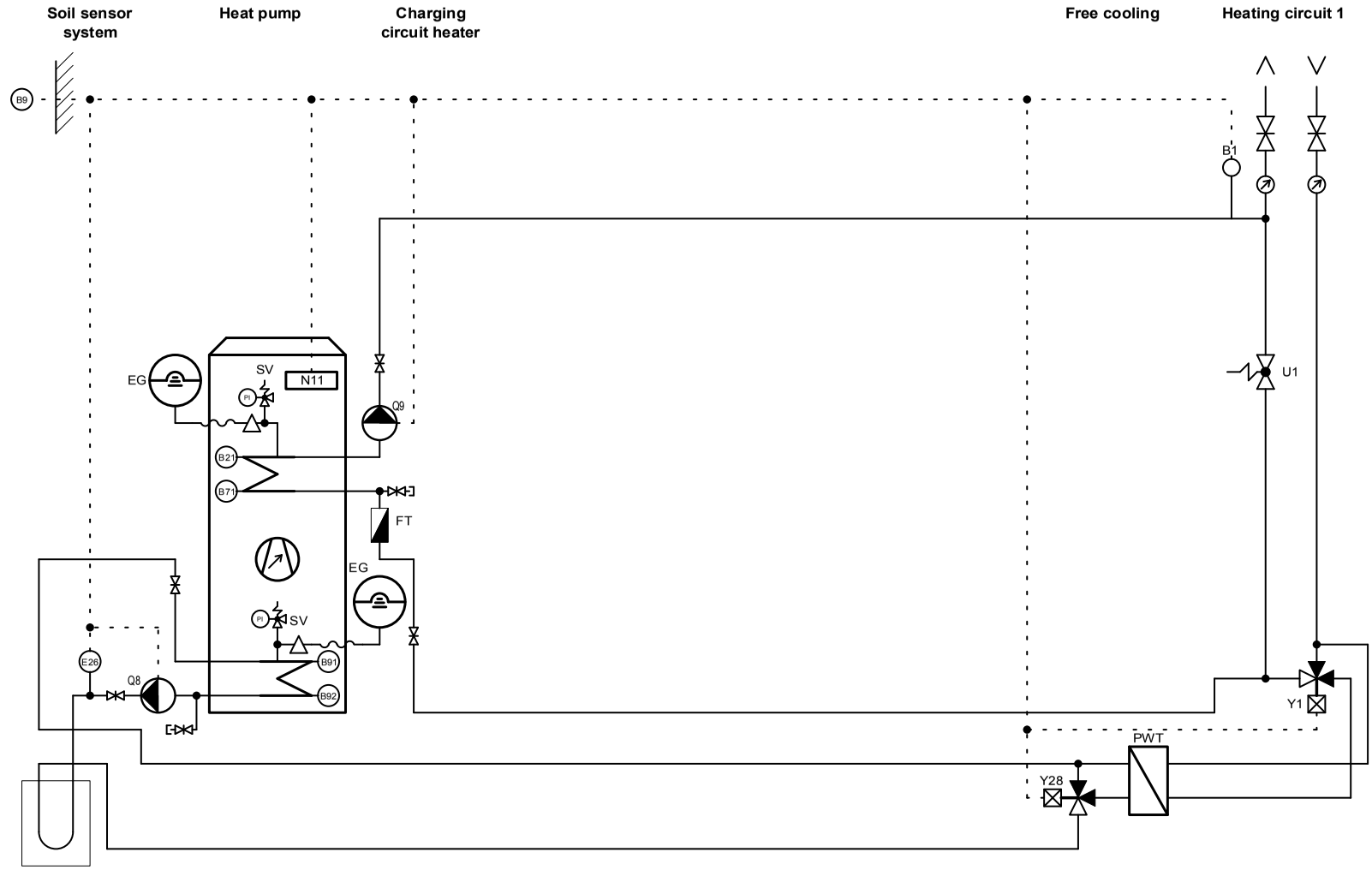

Legend

B1	Flow temperature sensor heating circuit	**Q8**	Brine pump
B21	Flow temperature sensor heat pump	**Q9**	Condenser pump
B71	Return flow temperature sensor heat pump	**U1**	Overflow valve
B9	External temperature sensor	**Y1**	Mixer for cooling circuit 230 V
B91	Brine inlet temperature sensor	**Y28**	Deflector valve 230 V source side
B92	Brine outlet temperature sensor		
EG	Expansion vessel		
E26	Brine pressure controller		
FT	Flow rate sensor		
N11	Heat pump controller		
PI	Pressure gauge		
PWT	Plate heat exchanger (for cooling)		

				DATE	03/2018
				DESIGNER	KAF
				Proved	SW
RESPONSIBLE	CHANGE	DATE	DESIGNER	Standard	SIA 410

OH Inverta Compact 01.00.10 E5

Subject to technical changes.

- Installation of additional components as per local regulations and conditions.
- This presentation is used as planning aid for the concerned installer.

PROJECTproject STANDARD

NAME OF DRAWING OH_I_Compact

Anlage | Funktion | Seite 2

Project Manager PM

No. pgs. 106

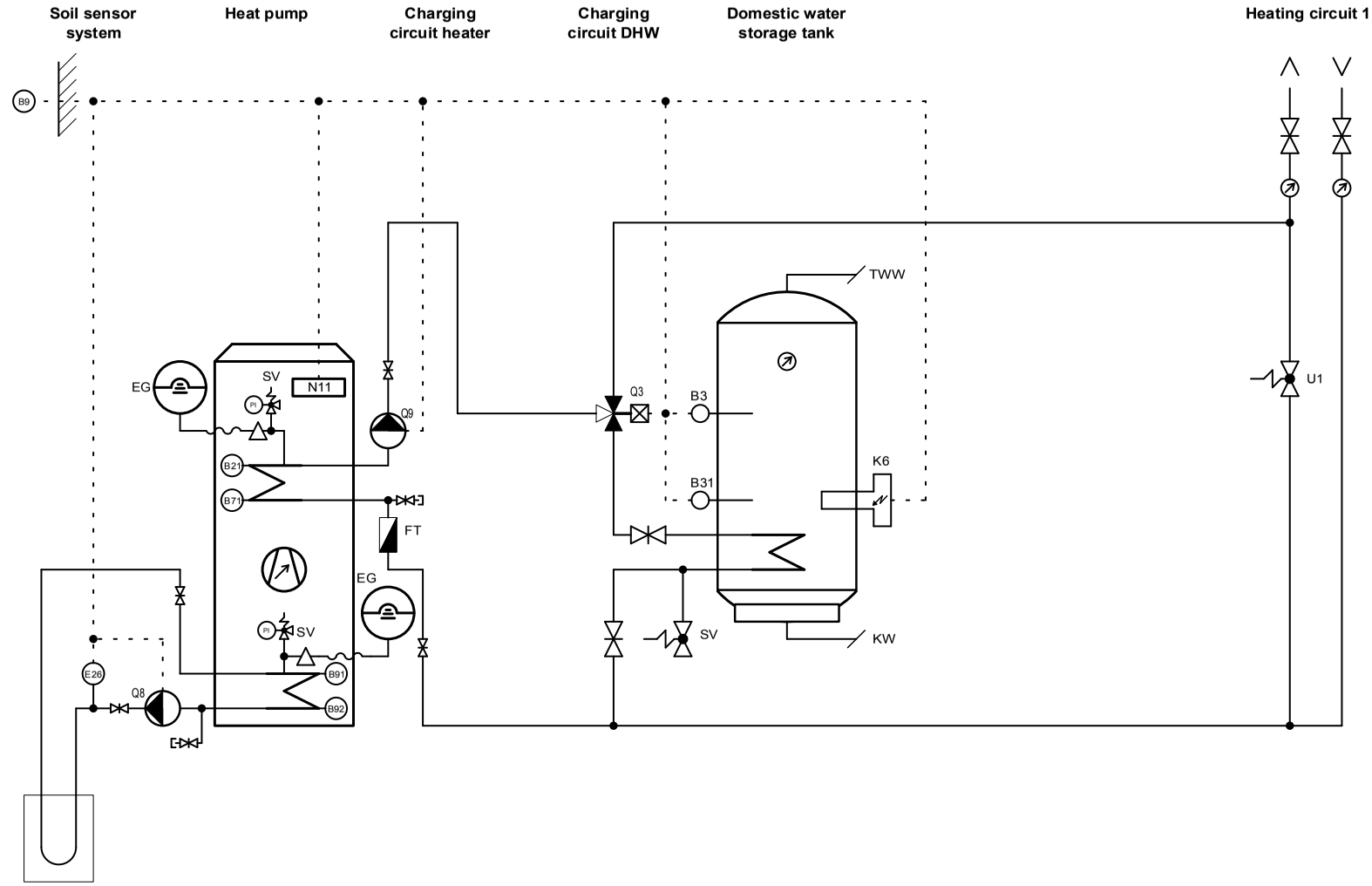

Legend

B21 Flow temperature sensor heat pump
B3 Domestic hot water temperature sensor
B31 DHW temperature sensor bottom (option)
B71 Return flow temperature sensor heat pump
B9 External temperature sensor
B91 Brine inlet temperature sensor
B92 Brine outlet temperature sensor
EG Expansion vessel
E26 Brine pressure controller
FT Flow rate sensor
KW Cold water

K6 Electrical heating element DHW (Power contactor+fuse in on-site tableau)

N11 Heat pump controller
PI Pressure gauge
Q3 Deflector valve DHW
Q33 DHW intermediate circuit pump
Q8 Brine pump
Q9 Condenser pump

SV Safety valve
U1 Overflow valve
TWW Domestic hot water

				DATE	03/2018
				DESIGNER	KAF
				Proved	SW
RESPONSIBLE	CHANGE	DATE	DESIGNER	Standard	SIA 410

OH Inverta Compact 01.20.10

Subject to technical changes.

- Installation of additional components as per local regulations and conditions.
- This presentation is used as planning aid for the concerned installer.

PROJECTproject STANDARD
NAME OF DRAWING OH_I_Compact

Anlage | Funktion | Seite 3
Project Manager PM
No. pgs. 106

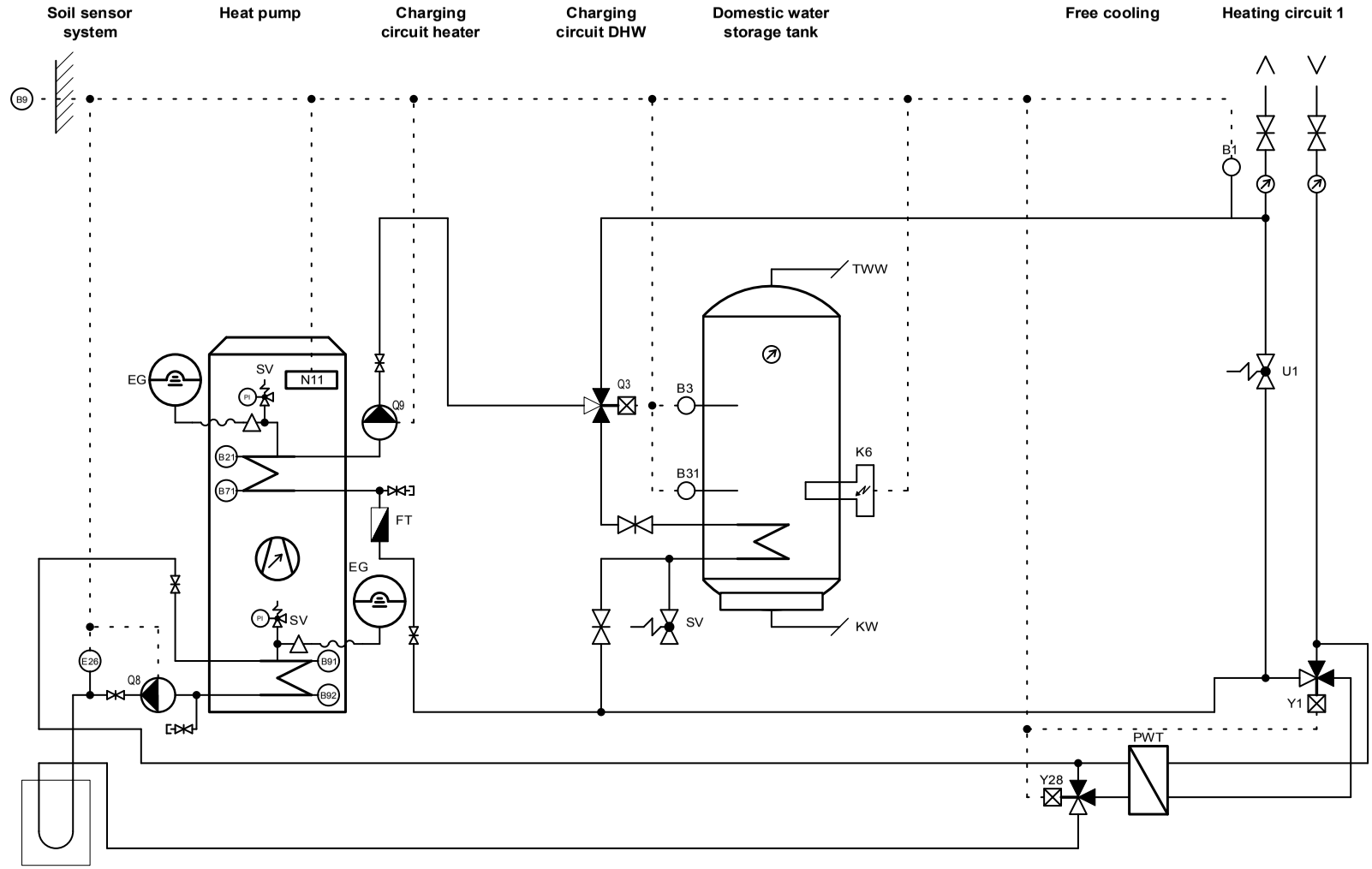

Legend

B1	Flow temperature sensor heating circuit	**PI**	Pressure gauge	**Y1**	Mixer for cooling circuit 230 V
B21	Flow temperature sensor heat pump	**PWT**	Plate heat exchanger (for cooling)	**Y28**	Deflector valve 230 V source side
B71	Return flow temperature sensor heat pump	**K6**	Electrical heating element DHW (Power contactor+fuse in on-site tableau)		
B3	Domestic hot water temperature sensor				
B31	DHW temperature sensor bottom (option)				
B9	External temperature sensor	**KW**	Cold water		
B91	Brine inlet temperature sensor	**Q3**	Deflector valve DHW		
B92	Brine outlet temperature sensor	**Q8**	Brine pump		
EG	Expansion vessel	**Q9**	Condenser pump		
E26	Brine pressure controller	**SV**	Safety valve		
FT	Flow rate sensor	**TWW**	Domestic hot water		
N11	Heat pump controller	**U1**	Overflow valve		

				DATE	03/2018
				DESIGNER	KAF
				Proved	SW
RESPONSIBLE	CHANGE	DATE	DESIGNER	Standard	SIA 410

OH Inverta Compact 01.20.10 E5

Subject to technical changes.

- Installation of additional components as per local regulations and conditions.
- This presentation is used as planning aid for the concerned installer.

PROJECTproject STANDARD

NAME OF DRAWING OH_I_Compact

Anlage	Funktion	Seite
		4

Project Manager PM

No. pgs. 106

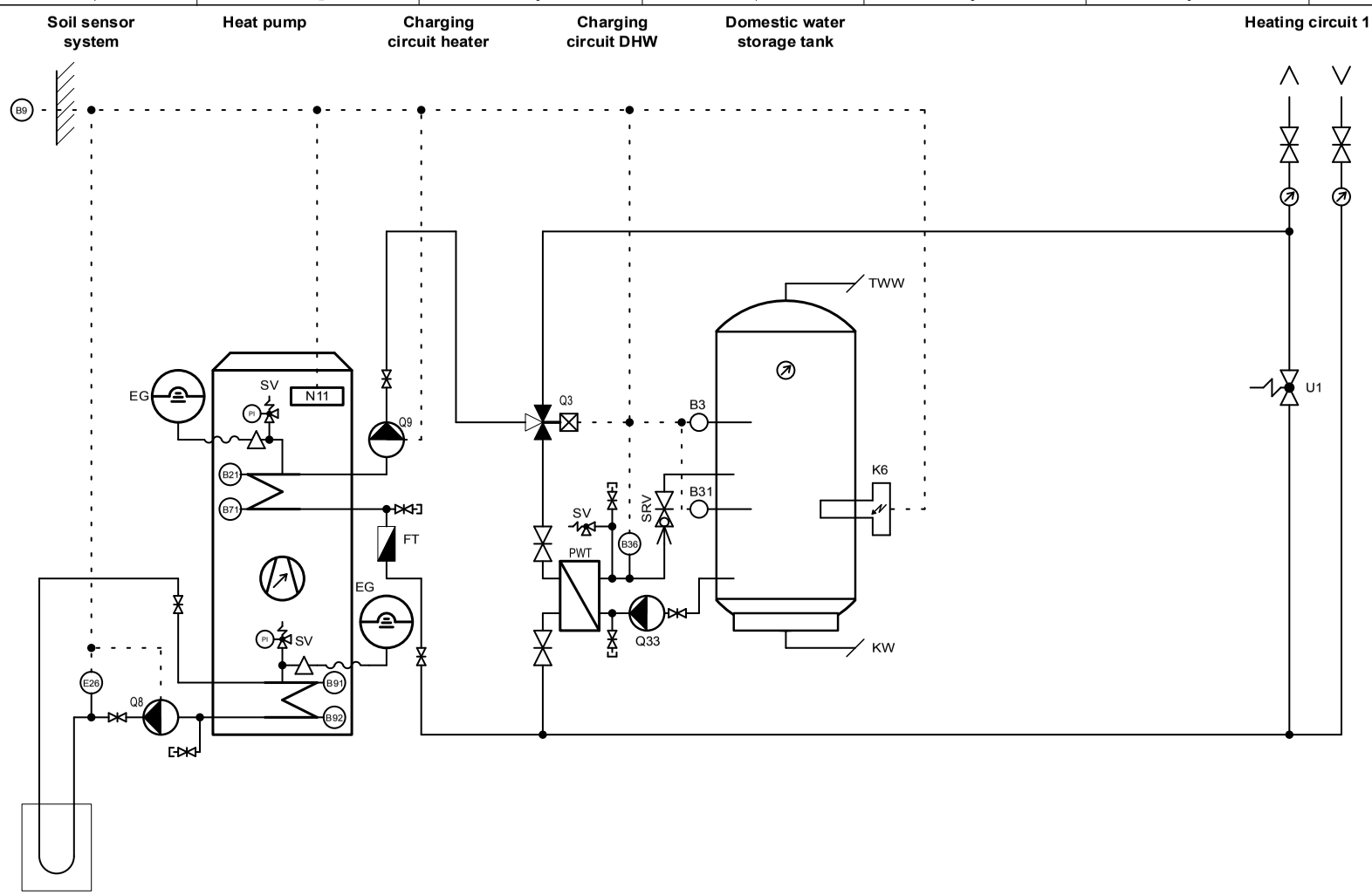

Legend

B21 Flow temperature sensor heat pump
B3 Domestic hot water temperature sensor
B31 DHW temperature sensor bottom (option)
B36 DHW charging temperature sensor
B71 Return flow temperature sensor heat pump
B9 External temperature sensor
B91 Brine inlet temperature sensor
B92 Brine outlet temperature sensor
EG Expansion vessel
E26 Brine pressure controller
FT Flow rate sensor
KW Cold water

K6 Electrical heating element DHW (Power contactor+fuse in on-site tableau)

N11 Heat pump controller
PI Pressure gauge
PWT Plate heat exchanger (for cooling)
Q3 Deflector valve DHW
Q33 DHW intermediate circuit pump
Q8 Brine pump
Q9 Condenser pump

SRV Balancing valve
SV Safety valve
U1 Overflow valve
TWW Domestic hot water

				DATE	03/2018
				DESIGNER	KAF
				Proved	SW
RESPONSIBLE	CHANGE	DATE	DESIGNER	Standard	SIA 410

OH Inverta Compact 01.20.10 E42

Subject to technical changes.

- Installation of additional components as per local regulations and conditions.
- This presentation is used as planning aid for the concerned installer.

PROJECTproject STANDARD
NAME OF DRAWING OH_I_Compact

Anlage	Funktion	Seite
		5
Project Manager		No. pgs. 106
PM		

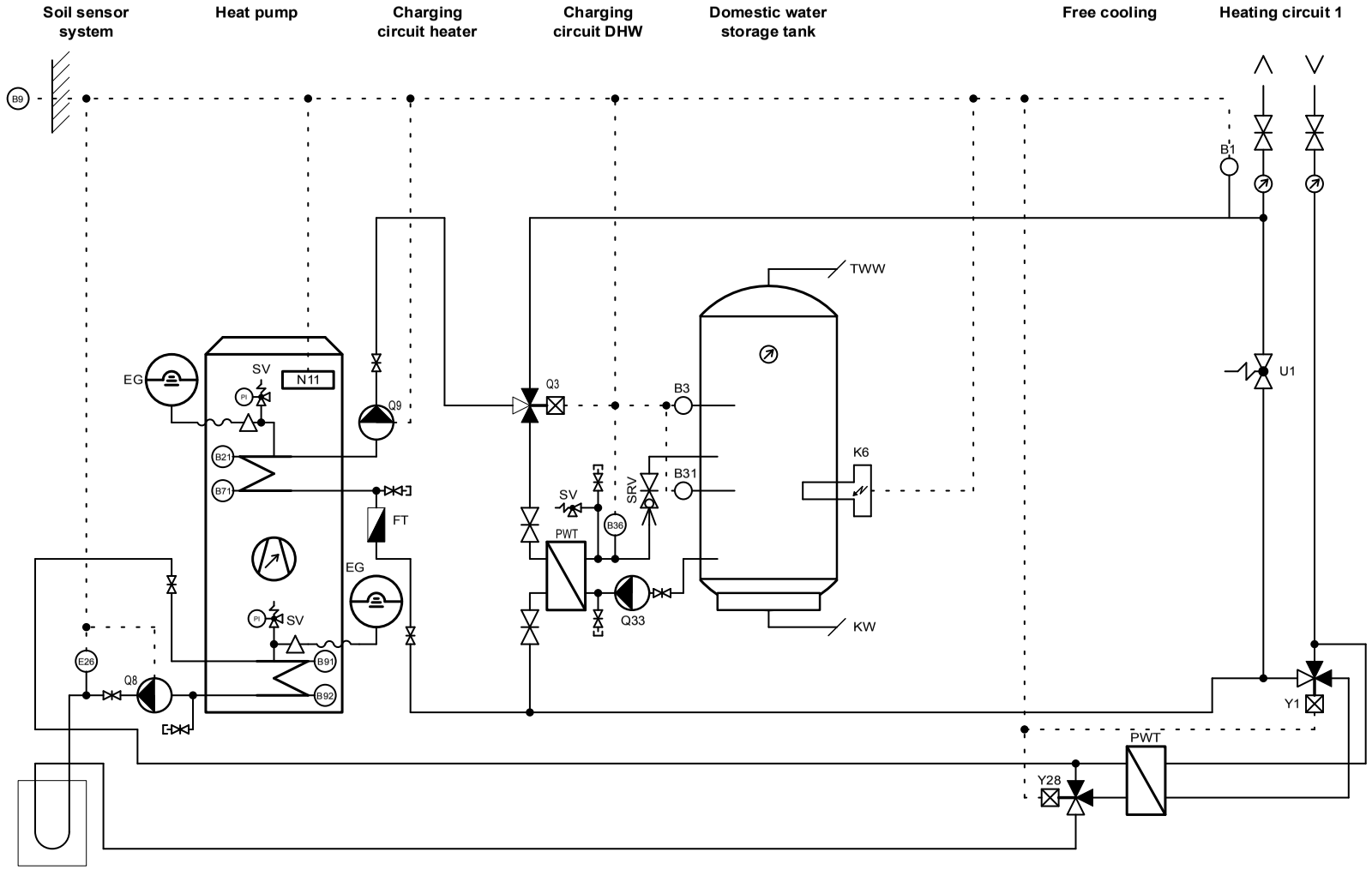

Legend

B1	Flow temperature sensor heating circuit	**N11**	Heat pump controller	**SRV**	Balancing valve
B21	Flow temperature sensor heat pump	**PI**	Pressure gauge	**SV**	Safety valve
B71	Return flow temperature sensor heat pump	**PWT**	Plate heat exchanger (for cooling)	**TWW**	Domestic hot water
B3	Domestic hot water temperature sensor	**K6**	Electrical heating element DHW (Power contactor+fuse in on-site tableau)	**U1**	Overflow valve
B31	DHW temperature sensor bottom (option)			**Y1**	Mixer for cooling circuit 230 V
B36	DHW charging temperature sensor			**Y28**	Deflector valve 230 V source side
B9	External temperature sensor	**KW**	Cold water		
B91	Brine inlet temperature sensor	**Q3**	Deflector valve DHW		
B92	Brine outlet temperature sensor	**Q33**	DHW intermediate circuit pump		
EG	Expansion vessel	**Q8**	Brine pump		
E26	Brine pressure controller	**Q9**	Condenser pump		
FT	Flow rate sensor	**PWT**	Plate heat exchanger (for cooling)		

				DATE	03/2018
				DESIGNER	KAF
				Proved	SW
RESPONSIBLE	CHANGE	DATE	DESIGNER	Standard	SIA 410

OH Inverta Compact 01.20.10 E5 E42

Subject to technical changes.

- Installation of additional components as per local regulations and conditions.
- This presentation is used as planning aid for the concerned installer.

PROJECTproject STANDARD

NAME OF DRAWING OH_I_Compact

Anlage | Funktion | Seite 6

Project Manager PM

No. pgs. 106

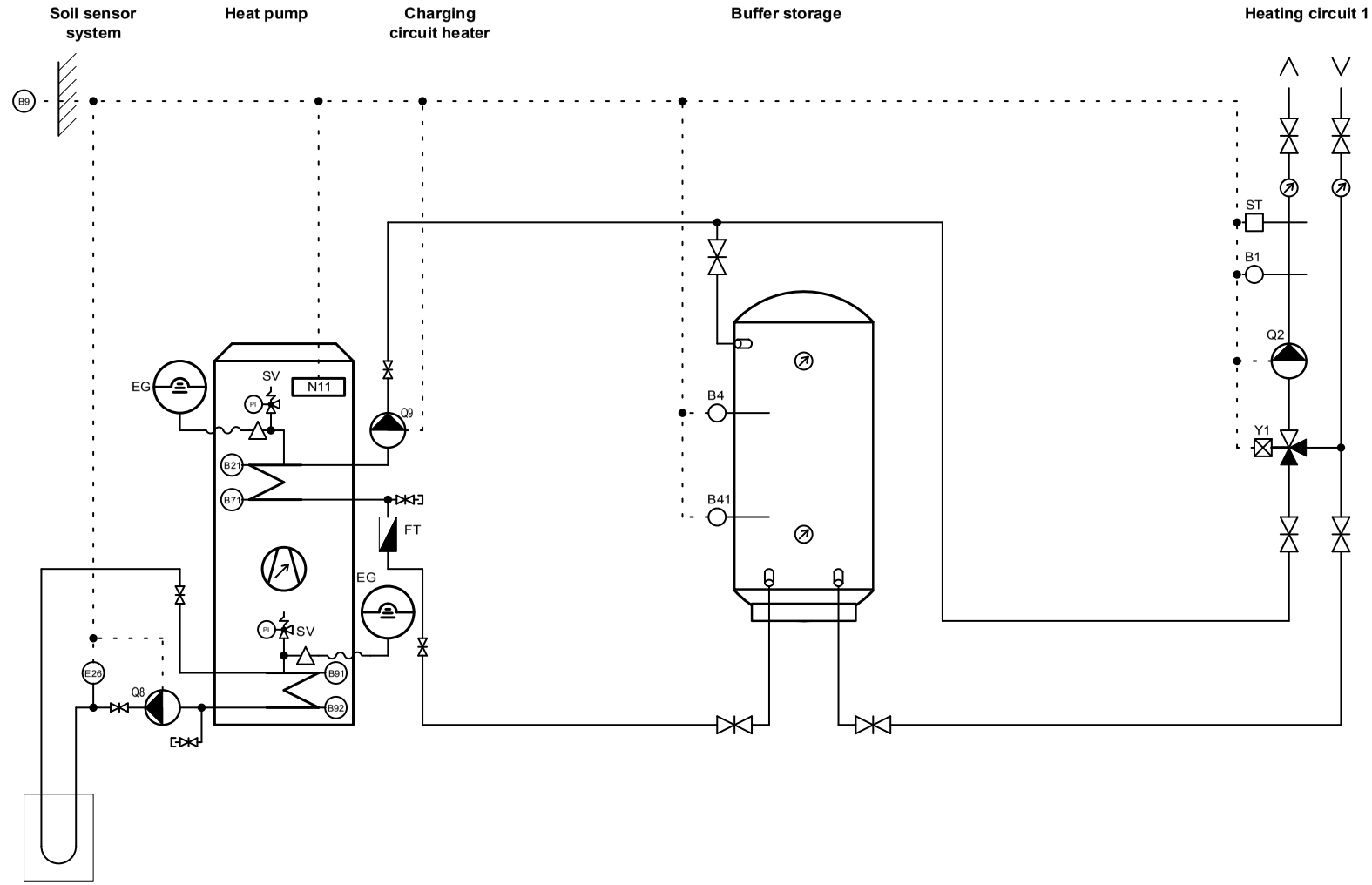

Legend

B1	Flow temperature sensor heating circuit	**PI**	Pressure gauge
B21	Flow temperature sensor heat pump	**Q2**	Heating circuit pump 1
B4	Buffer storage temperature sensor	**Q8**	Brine pump
B41	Buffer storage temp. sensor bottom (option)	**Q9**	Condenser pump
B71	Return flow temperature sensor heat pump	**ST**	Safety thermostat
B9	External temperature sensor	**Y1**	Heating circuit mixer 1
B91	Brine inlet temperature sensor		
B92	Brine outlet temperature sensor		
EG	Expansion vessel		
E26	Brine pressure controller		
FT	Flow rate sensor		
N11	Heat pump controller		

				DATE	03/2018
				DESIGNER	KAF
				Proved	SW
RESPONSIBLE	CHANGE	DATE	DESIGNER	Standard	SIA 410

OH Inverta Compact 02.00.10

Subject to technical changes.

- Installation of additional components as per local regulations and conditions.
- This presentation is used as planning aid for the concerned installer.

PROJECTproject STANDARD

NAME OF DRAWING OH_I_Compact

Anlage | Funktion | Seite 7

Project Manager PM

No. pgs. 106

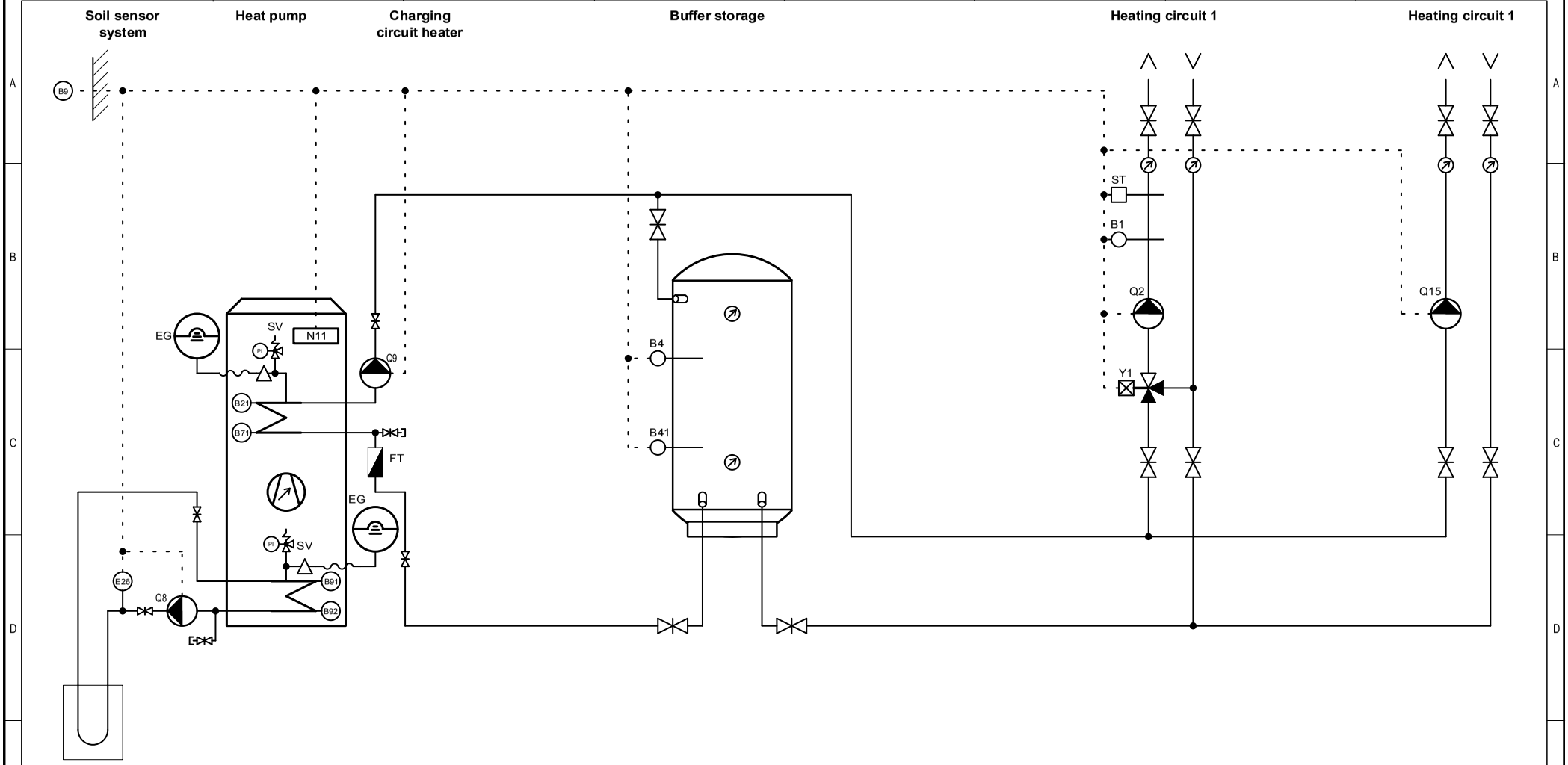

Legend

B1	Flow temperature sensor heating circuit	**PI**	Pressure gauge
B21	Flow temperature sensor heat pump	**Q2**	Heating circuit pump 1
B4	Buffer storage temperature sensor	**Q8**	Brine pump
B41	Buffer storage temp. sensor bottom (option)	**Q9**	Condenser pump
B71	Return flow temperature sensor heat pump	**Q15**	Heating circuit pump
B9	External temperature sensor	**ST**	Safety thermostat
B91	Brine inlet temperature sensor	**Y1**	Heating circuit mixer 1
B92	Brine outlet temperature sensor		
EG	Expansion vessel		
E26	Brine pressure controller		
FT	Flow rate sensor		
N11	Heat pump controller		

				DATE	03/2018
				DESIGNER	KAF
				Proved	SW
RESPONSIBLE	CHANGE	DATE	DESIGNER	Standard	SIA 410

OH Inverta Compact 02.00.10 E8

Subject to technical changes.

- Installation of additional components as per local regulations and conditions.
- This presentation is used as planning aid for the concerned installer.

PROJECTproject STANDARD

NAME OF DRAWING OH_I_Compact

Anlage | Funktion | Seite 8

Project Manager PM

No. pgs. 106

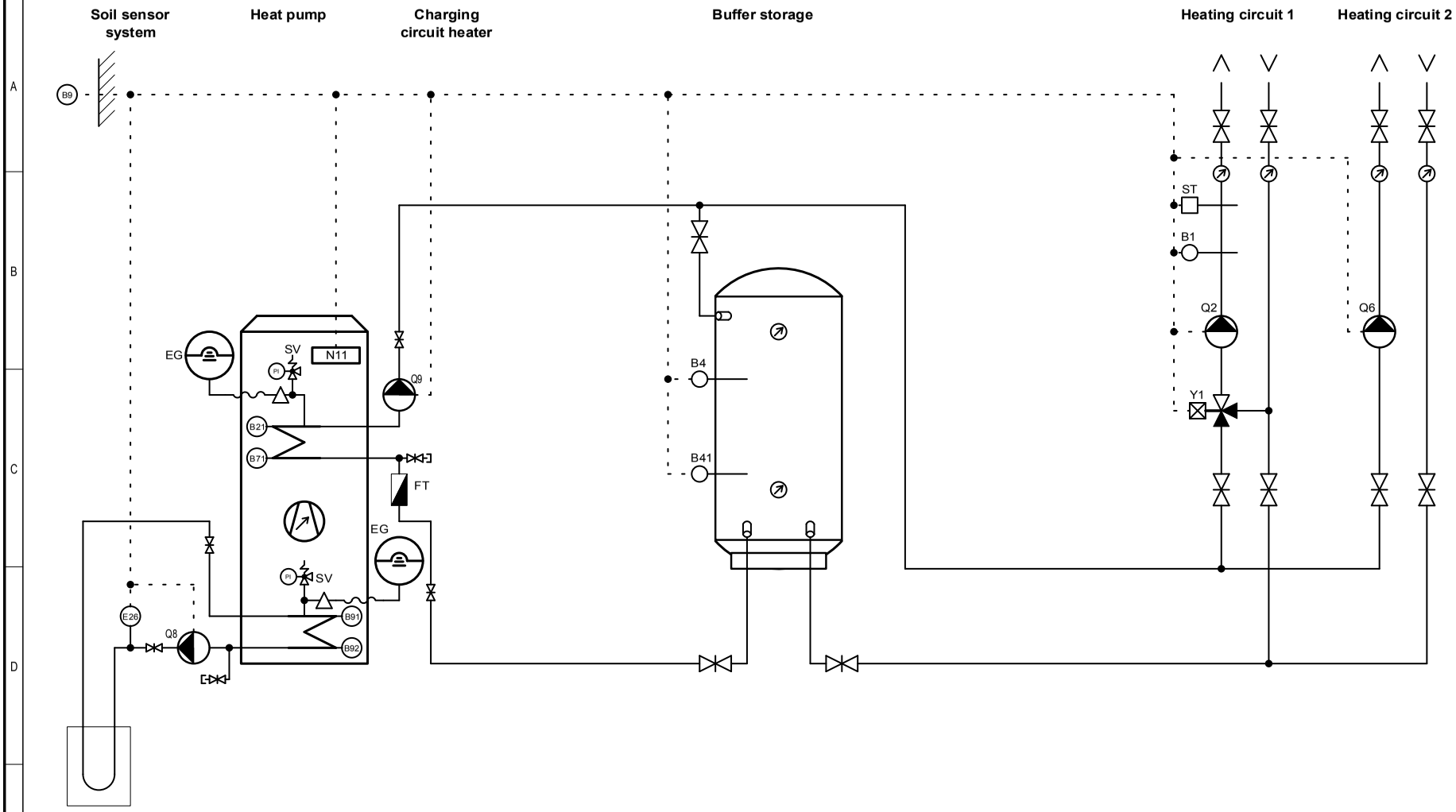

Legend

B1	Flow temperature sensor heating circuit	**PI**	Pressure gauge
B21	Flow temperature sensor heat pump	**Q2**	Heating circuit pump 1
B4	Buffer storage temperature sensor	**Q8**	Brine pump
B41	Buffer storage temp. sensor bottom (option)	**Q9**	Condenser pump
B71	Return flow temperature sensor heat pump	**Q6**	Heating circuit pump 2
B9	External temperature sensor	**ST**	Safety thermostat
B91	Brine inlet temperature sensor	**U1**	Overflow valve
B92	Brine outlet temperature sensor	**Y1**	Heating circuit mixer 1
EG	Expansion vessel		
E26	Brine pressure controller		
FT	Flow rate sensor		
N11	Heat pump controller		

				DATE	03/2018
				DESIGNER	KAF
				Proved	SW
RESPONSIBLE	CHANGE	DATE	DESIGNER	Standard	SIA 410

OH Inverta Compact 02.00.10 E1

Subject to technical changes.

- Installation of additional components as per local regulations and conditions.
- This presentation is used as planning aid for the concerned installer.

PROJECTproject STANDARD

NAME OF DRAWING OH_I_Compact

Anlage | Funktion | Seite 9

Project Manager PM

No. pgs. 106

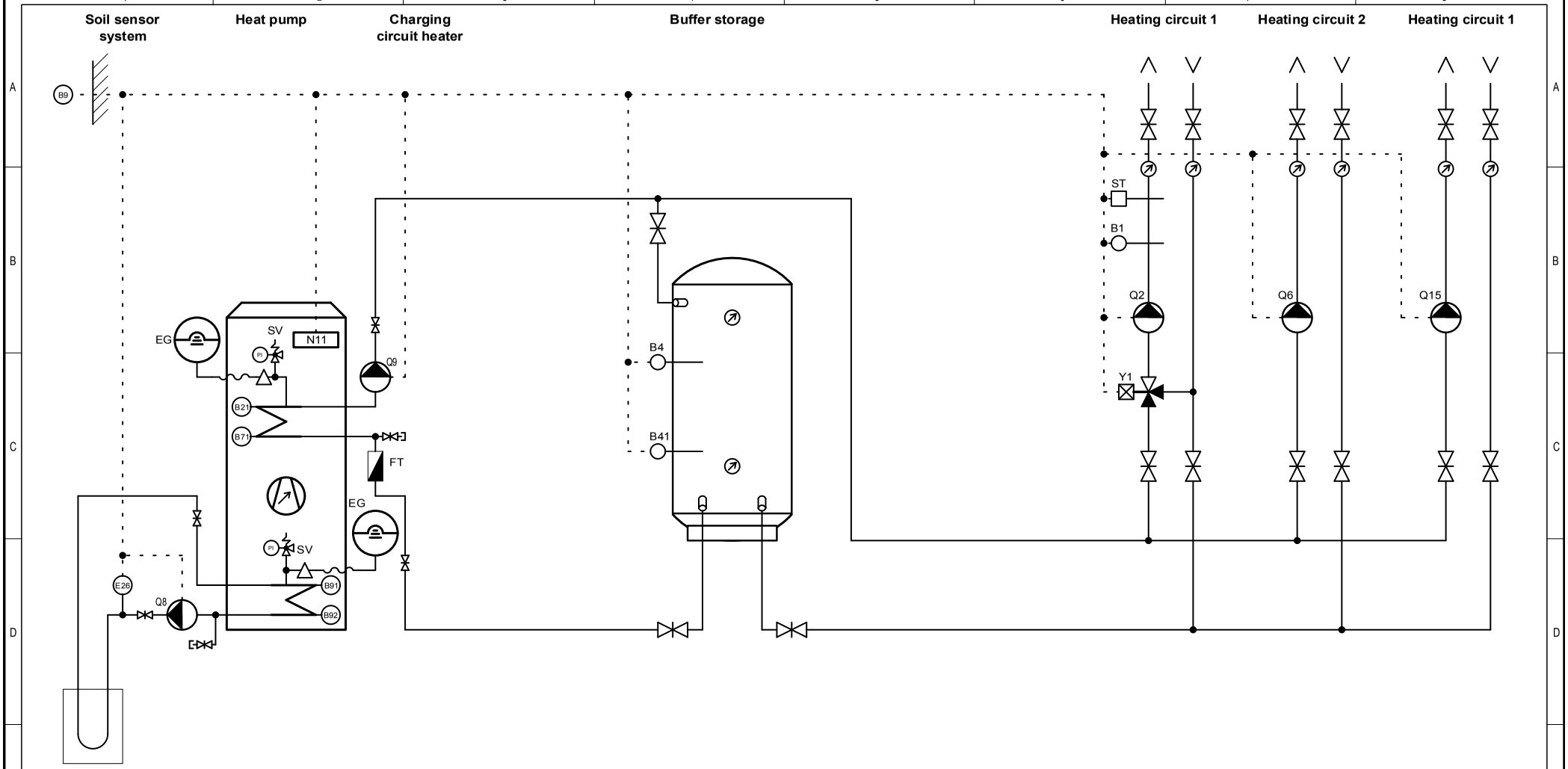

Legend

B1	Flow temperature sensor heating circuit	**PI**	Pressure gauge
B21	Flow temperature sensor heat pump	**Q2**	Heating circuit pump 1
B4	Buffer storage temperature sensor	**Q8**	Brine pump
B41	Buffer storage temp. sensor bottom (option)	**Q9**	Condenser pump
B71	Return flow temperature sensor heat pump	**Q6**	Heating circuit pump 2
B9	External temperature sensor	**Q15**	Heating circuit pump
B91	Brine inlet temperature sensor	**ST**	Safety thermostat
B92	Brine outlet temperature sensor	**U1**	Overflow valve
EG	Expansion vessel	**Y1**	Heating circuit mixer 1
E26	Brine pressure controller		
FT	Flow rate sensor		
N11	Heat pump controller		

				DATE	03/2018
				DESIGNER	KAF
				Proved	SW
RESPONSIBLE	CHANGE	DATE	DESIGNER	Standard	SIA 410

OH Inverta Compact 02.00.10 E1 E8

Subject to technical changes.

- Installation of additional components as per local regulations and conditions.
- This presentation is used as planning aid for the concerned installer.

PROJECTproject STANDARD

NAME OF DRAWING OH_I_Compact

Anlage | Funktion | Seite 10

Project Manager PM

No. pgs. 106

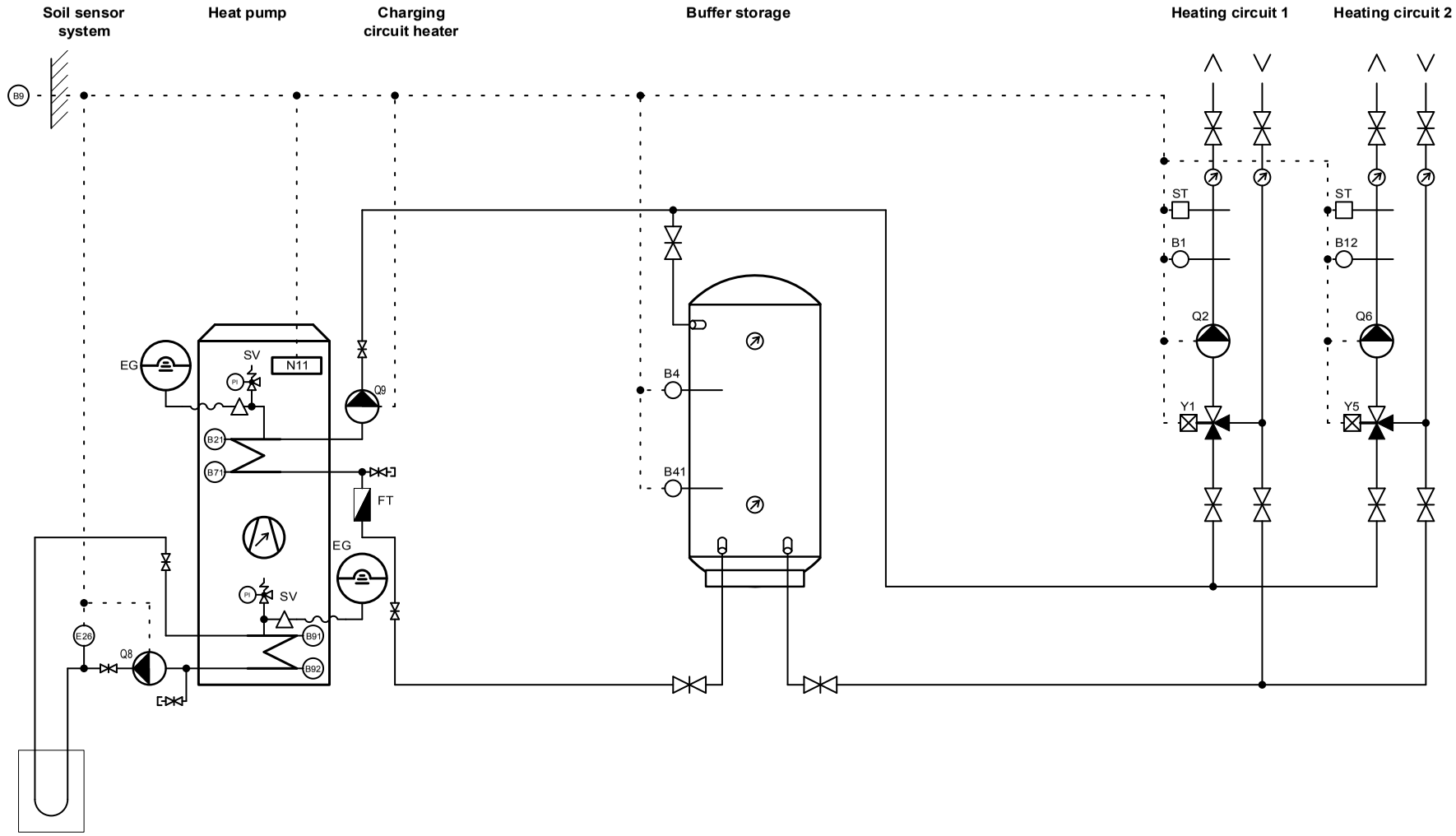

Legend

B1	Flow temperature sensor heating circuit	**N11**	Heat pump controller
B21	Flow temperature sensor heat pump	**PI**	Pressure gauge
B4	Buffer storage temperature sensor	**Q2**	Heating circuit pump 1
B41	Buffer storage temp. sensor bottom (option)	**Q8**	Brine pump
B71	Return flow temperature sensor heat pump	**Q9**	Condenser pump
B9	External temperature sensor	**Y5**	Heating circuit mixer 2
B91	Brine inlet temperature sensor	**Q6**	Heating circuit pump 2
B92	Brine outlet temperature sensor	**ST**	Safety thermostat
B12	Flow temp. sensor heating circuit 2	**U1**	Overflow valve
EG	Expansion vessel	**Y1**	Heating circuit mixer 1
E26	Brine pressure controller		
FT	Flow rate sensor		

				DATE	03/2018
				DESIGNER	KAF
				Proved	SW
RESPONSIBLE	CHANGE	DATE	DESIGNER	Standard	SIA 410

OH Inverta Compact 02.00.10 E2

Subject to technical changes.

- Installation of additional components as per local regulations and conditions.
- This presentation is used as planning aid for the concerned installer.

PROJECTproject STANDARD

NAME OF DRAWING OH_I_Compact

Anlage | Funktion | Seite 11

Project Manager PM

No. pgs. 106

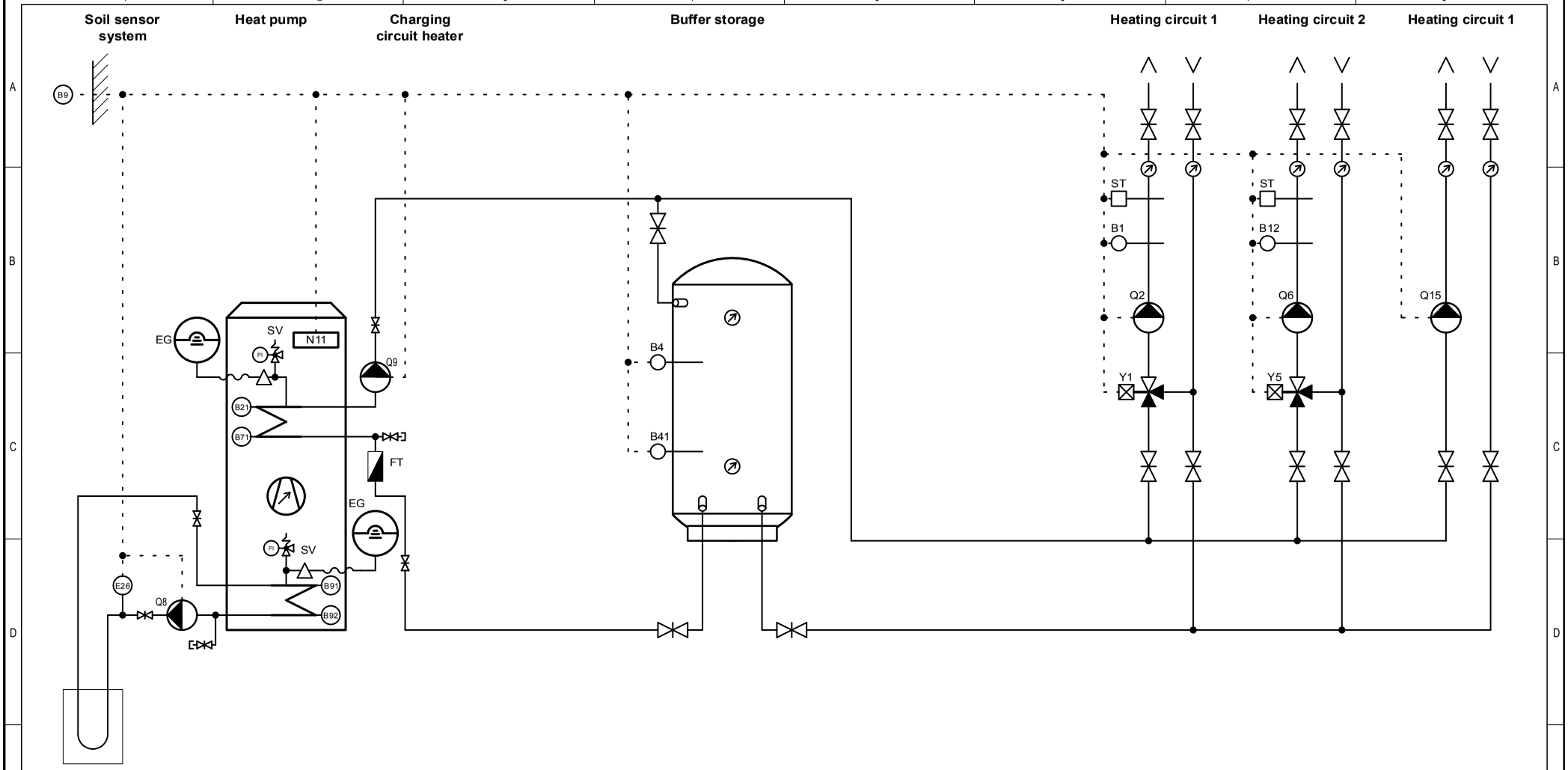

Legend

B1	Flow temperature sensor heating circuit	**N11**	Heat pump controller
B21	Flow temperature sensor heat pump	**PI**	Pressure gauge
B4	Buffer storage temperature sensor	**Q2**	Heating circuit pump 1
B41	Buffer storage temp. sensor bottom (option)	**Q6**	Heating circuit pump 2
B71	Return flow temperature sensor heat pump	**Q8**	Brine pump
B9	External temperature sensor	**Q9**	Condenser pump
B91	Brine inlet temperature sensor	**Q15**	Heating circuit pump
B92	Brine outlet temperature sensor	**ST**	Safety thermostat
B12	Flow temp. sensor heating circuit 2	**U1**	Overflow valve
EG	Expansion vessel	**Y1**	Heating circuit mixer 1
E26	Brine pressure controller	**Y5**	Heating circuit mixer 2
FT	Flow rate sensor		

				DATE	03/2018
				DESIGNER	KAF
				Proved	SW
RESPONSIBLE	CHANGE	DATE	DESIGNER	Standard	SIA 410

OH Inverta Compact 02.00.10 E2 E8

Subject to technical changes.

- Installation of additional components as per local regulations and conditions.
- This presentation is used as planning aid for the concerned installer.

PROJECTproject STANDARD

NAME OF DRAWING OH_I_Compact

Anlage | Funktion | Seite 12

Project Manager PM

No. pgs. 106

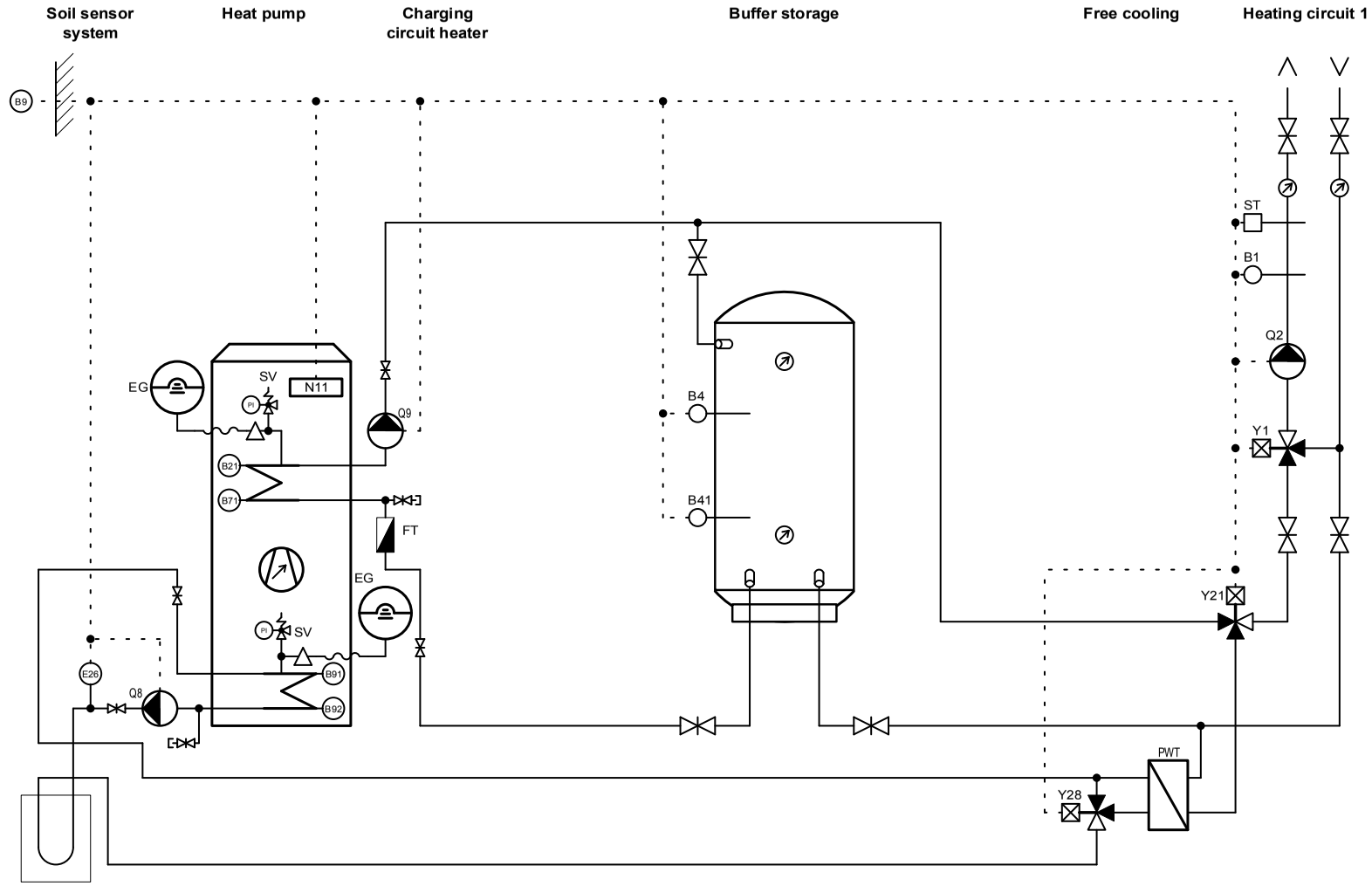

Legend

B1	Flow temperature sensor heating circuit	**PI**	Pressure gauge
B21	Flow temperature sensor heat pump	**PWT**	Plate heat exchanger (for cooling)
B4	Buffer storage temperature sensor	**Q2**	Heating circuit pump 1
B41	Buffer storage temp. sensor bottom (option)	**Q8**	Brine pump
B71	Return flow temperature sensor heat pump	**Q9**	Condenser pump
B9	External temperature sensor	**Y1**	Heating circuit mixer 1
B91	Brine inlet temperature sensor	**Y21**	Deflector valve 230 V heating circuit
B92	Brine outlet temperature sensor	**Y28**	Deflector valve 230 V source side
EG	Expansion vessel		
E26	Brine pressure controller		
FT	Flow rate sensor		
N11	Heat pump controller		

				DATE	03/2018
				DESIGNER	KAF
				Proved	SW
RESPONSIBLE	CHANGE	DATE	DESIGNER	Standard	SIA 410

OH Inverta Compact 02.00.10 E6

Subject to technical changes.

- Installation of additional components as per local regulations and conditions.
- This presentation is used as planning aid for the concerned installer.

PROJECTproject STANDARD

NAME OF DRAWING OH_I_Compact

Anlage | Funktion | Seite 13

Project Manager PM

No. pgs. 106

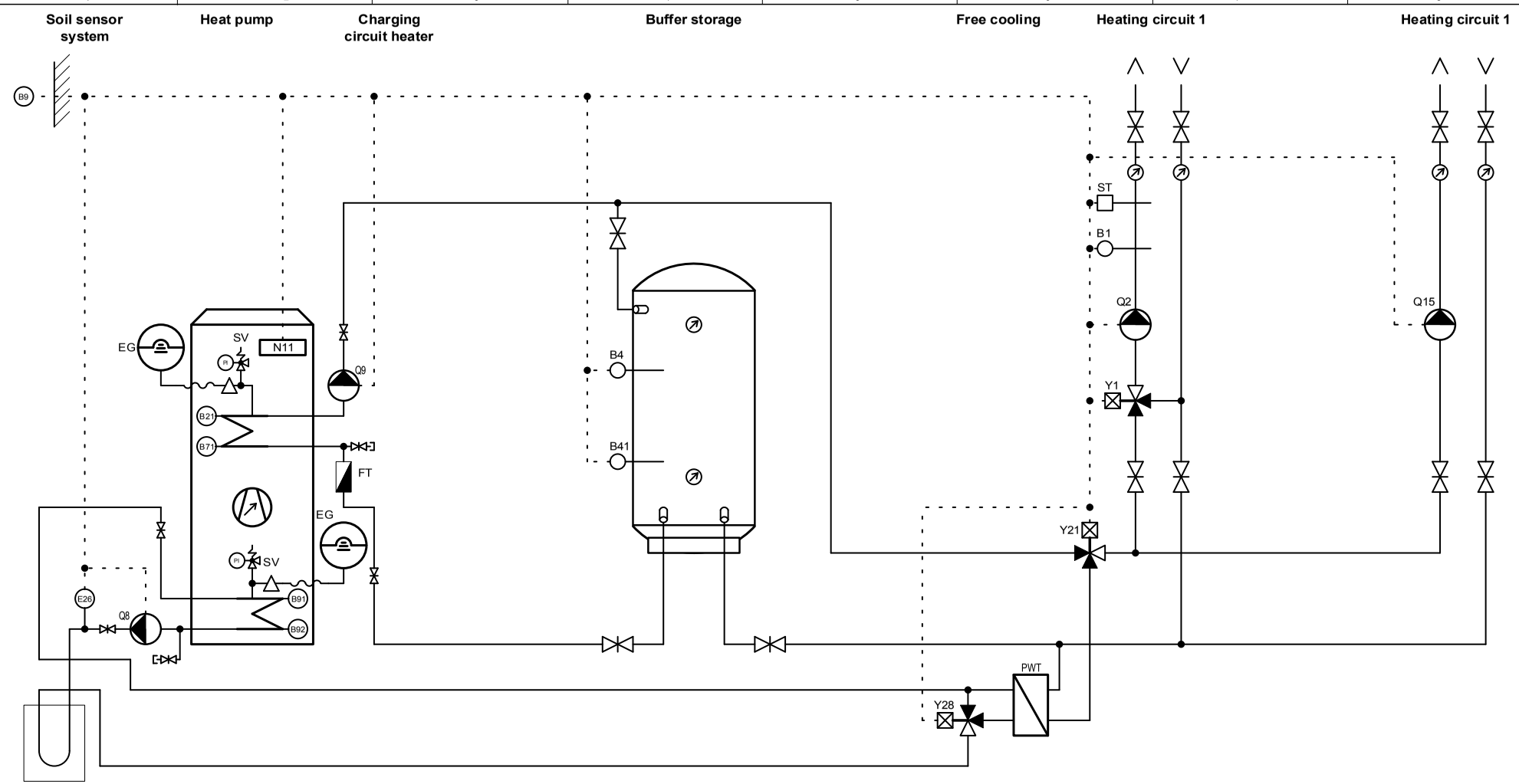

Legend

B1	Flow temperature sensor heating circuit	**PI**	Pressure gauge
B21	Flow temperature sensor heat pump	**PWT**	Plate heat exchanger (for cooling)
B4	Buffer storage temperature sensor	**Q2**	Heating circuit pump 1
B41	Buffer storage temp. sensor bottom (option)	**Q8**	Brine pump
B71	Return flow temperature sensor heat pump	**Q9**	Condenser pump
B9	External temperature sensor	**Q15**	Heating circuit pump
B91	Brine inlet temperature sensor	**Y1**	Heating circuit mixer 1
B92	Brine outlet temperature sensor	**Y21**	Deflector valve 230 V heating circuit
EG	Expansion vessel	**Y28**	Deflector valve 230 V source side
E26	Brine pressure controller		
FT	Flow rate sensor		
N11	Heat pump controller		

				DATE	03/2018
				DESIGNER	KAF
				Proved	SW
RESPONSIBLE	CHANGE	DATE	DESIGNER	Standard	SIA 410

OH Inverta Compact 02.00.10 E6 E8

Subject to technical changes.

- Installation of additional components as per local regulations and conditions.
- This presentation is used as planning aid for the concerned installer.

PROJECTproject STANDARD

NAME OF DRAWING OH_I_Compact

Anlage | Funktion | Seite 14

Project Manager PM

No. pgs. 106

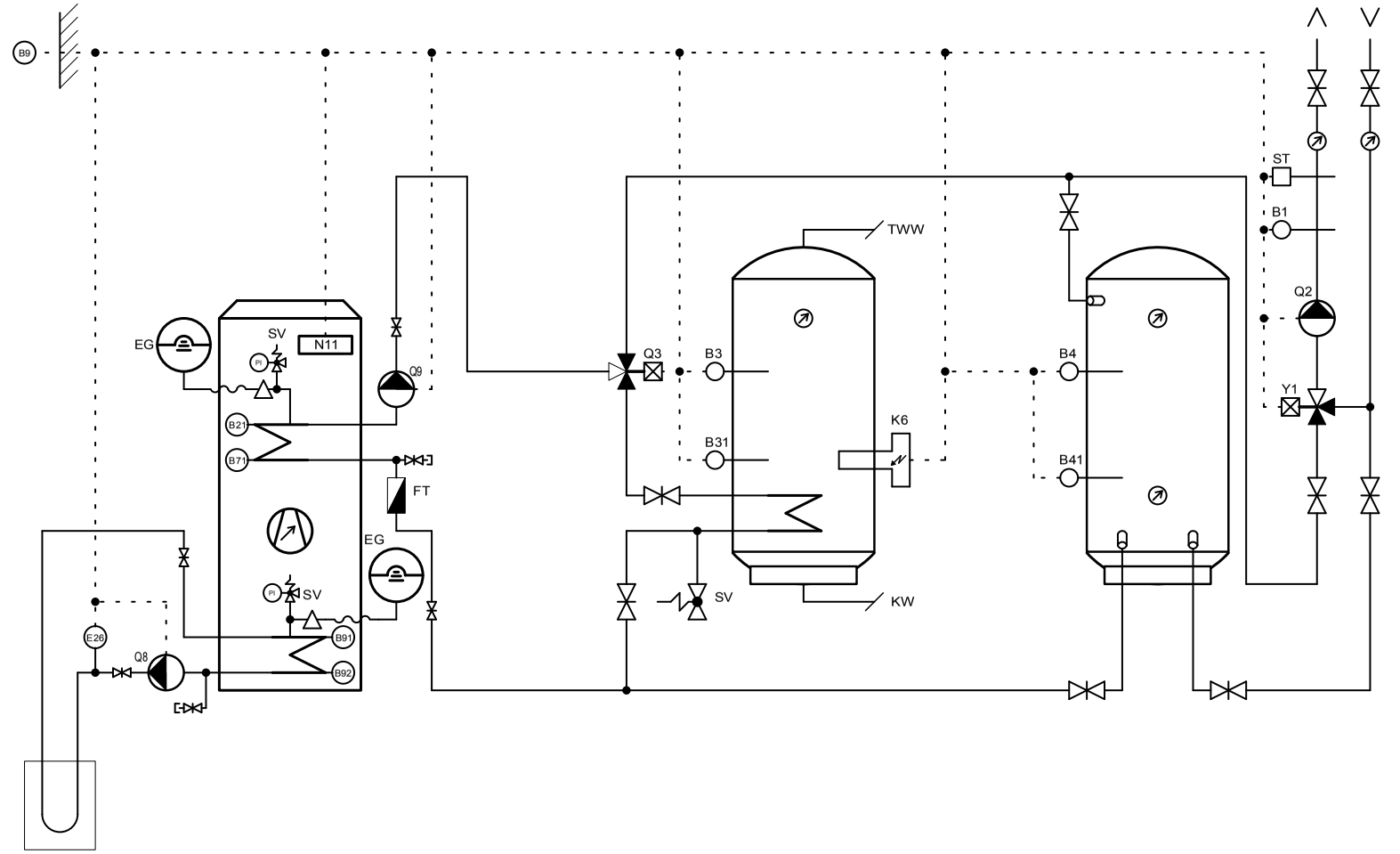

Legend

B1	Flow temperature sensor heating circuit	**FT**	Flow rate sensor	**Q9**	Condenser pump
B21	Flow temperature sensor heat pump	**KW**	Cold water	**SV**	Safety valve
B3	Domestic hot water temperature sensor	**K6**	Electrical heating element DHW (Power contactor+fuse in on-site tableau)	**PI**	Pressure gauge
B31	DHW temperature sensor bottom (option)			**TWW**	Domestic hot water
B4	Buffer storage temperature sensor			**Y1**	Heating circuit mixer 1
B41	Buffer storage temp. sensor bottom (option)			**ST**	Safety thermostat
B71	Return flow temperature sensor heat pump				
B9	External temperature sensor	**N11**	Heat pump controller		
B91	Brine inlet temperature sensor	**Q2**	Heating circuit pump 1		
B92	Brine outlet temperature sensor	**Q3**	Deflector valve DHW		
EG	Expansion vessel	**Q33**	DHW intermediate circuit pump		
E26	Brine pressure controller	**Q8**	Brine pump		

				DATE	03/2018
				DESIGNER	KAF
				Proved	SW
RESPONSIBLE	CHANGE	DATE	DESIGNER	Standard	SIA 410

OH Inverta Compact 02.20.10

Subject to technical changes.

- Installation of additional components as per local regulations and conditions.
- This presentation is used as planning aid for the concerned installer.

PROJECTproject STANDARD

NAME OF DRAWING OH_I_Compact

Anlage | Funktion | Seite 15

Project Manager PM

No. pgs. 106

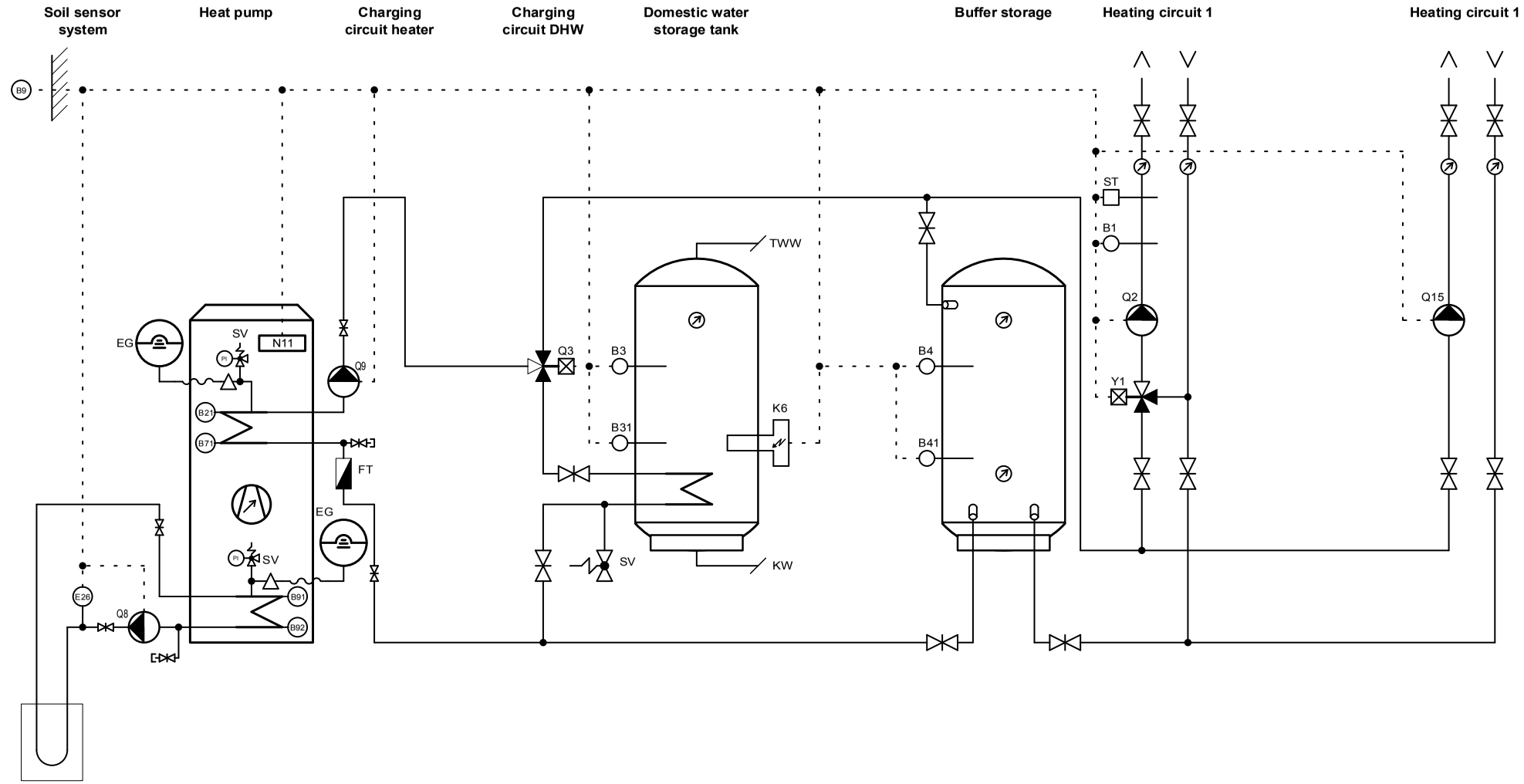

Legend

B1	Flow temperature sensor heating circuit	**FT**	Flow rate sensor	**Q9**	Condenser pump
B21	Flow temperature sensor heat pump	**KW**	Cold water	**Q15**	Heating circuit pump
B3	Domestic hot water temperature sensor	**K6**	Electrical heating element DHW (Power contactor+fuse in on-site tableau)	**SV**	Safety valve
B31	DHW temperature sensor bottom (option)			**PI**	Pressure gauge
B4	Buffer storage temperature sensor			**TWW**	Domestic hot water
B41	Buffer storage temp. sensor bottom (option)			**Y1**	Heating circuit mixer 1
B71	Return flow temperature sensor heat pump			**ST**	Safety thermostat
B9	External temperature sensor	**N11**	Heat pump controller		
B91	Brine inlet temperature sensor	**Q2**	Heating circuit pump 1		
B92	Brine outlet temperature sensor	**Q3**	Deflector valve DHW		
EG	Expansion vessel	**Q33**	DHW intermediate circuit pump		
E26	Brine pressure controller	**Q8**	Brine pump		

				DATE	03/2018
				DESIGNER	KAF
				Proved	SW
RESPONSIBLE	CHANGE	DATE	DESIGNER	Standard	SIA 410

OH Inverta Compact 02.20.10 E8

Subject to technical changes.

- Installation of additional components as per local regulations and conditions.
- This presentation is used as planning aid for the concerned installer.

PROJECTproject STANDARD

NAME OF DRAWING OH_I_Compact

Anlage | Funktion | Seite 16

Project Manager PM

No. pgs. 106

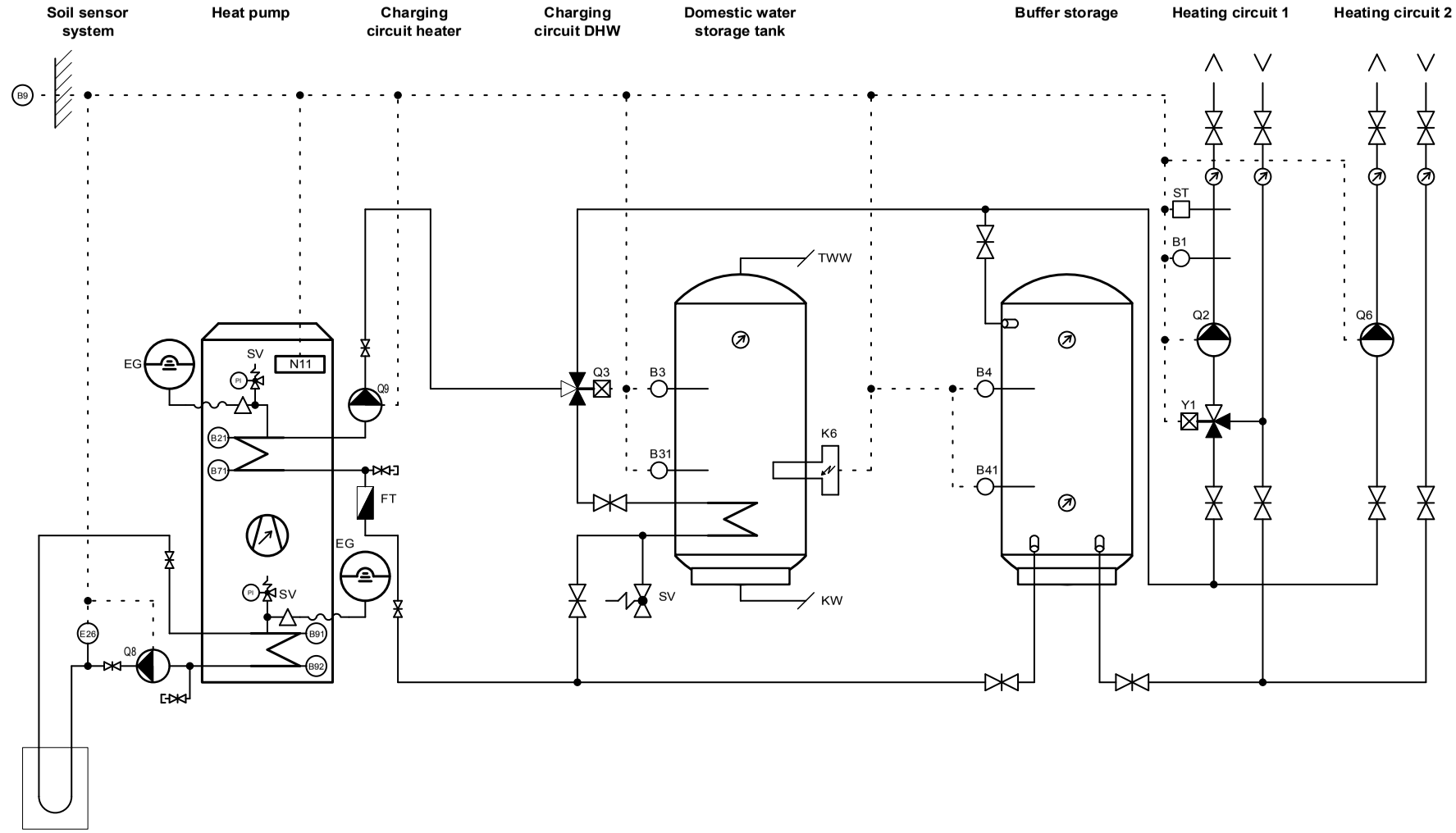

Legend

B1 Flow temperature sensor heating circuit
B21 Flow temperature sensor heat pump
B3 Domestic hot water temperature sensor
B31 DHW temperature sensor bottom (option)
B4 Buffer storage temperature sensor
B41 Buffer storage temp. sensor bottom (option)
B71 Return flow temperature sensor heat pump
B9 External temperature sensor
B91 Brine inlet temperature sensor
B92 Brine outlet temperature sensor
EG Expansion vessel
E26 Brine pressure controller

FT Flow rate sensor
KW Cold water
K6 Electrical heating element DHW (Power contactor+fuse in on-site tableau)

N11 Heat pump controller
Q2 Heating circuit pump 1
Q3 Deflector valve DHW
Q33 DHW intermediate circuit pump

Q6 Heating circuit pump 2
Q8 Brine pump
Q9 Condenser pump
SV Safety valve
PI Pressure gauge
TWW Domestic hot water
Y1 Heating circuit mixer 1
ST Safety thermostat

				DATE	03/2018
				DESIGNER	KAF
				Proved	SW
RESPONSIBLE	CHANGE	DATE	DESIGNER	Standard	SIA 410

OH Inverta Compact 02.20.10 E1

Subject to technical changes.

- Installation of additional components as per local regulations and conditions.
- This presentation is used as planning aid for the concerned installer.

PROJECTproject STANDARD
NAME OF DRAWING OH_I_Compact

Anlage | Funktion | Seite 17
Project Manager PM
No. pgs. 106

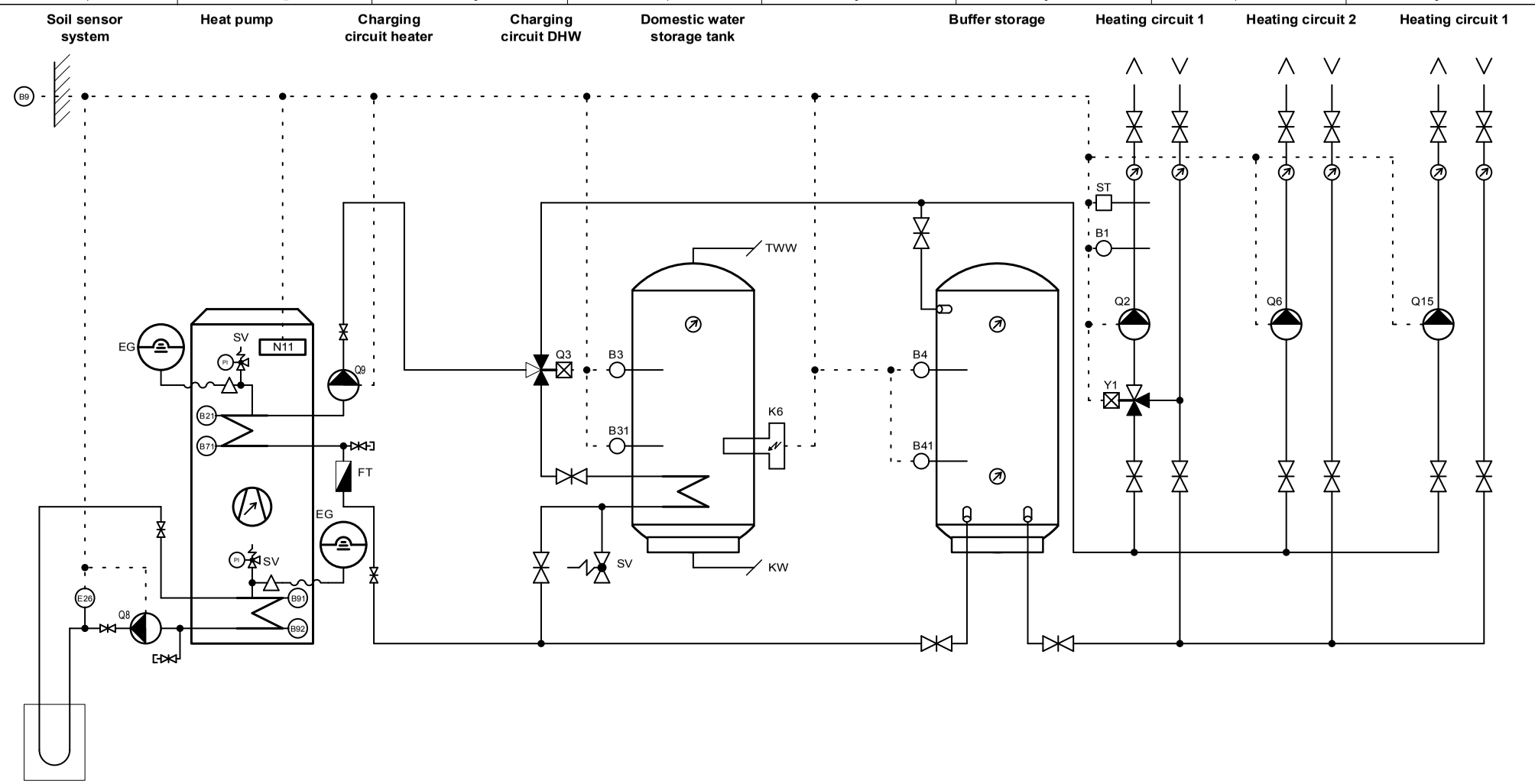

Legend

B1	Flow temperature sensor heating circuit	**FT**	Flow rate sensor	**Q6**	Heating circuit pump 2
B21	Flow temperature sensor heat pump	**KW**	Cold water	**Q8**	Brine pump
B3	Domestic hot water temperature sensor	**K6**	Electrical heating element DHW (Power contactor+fuse in on-site tableau)	**Q9**	Condenser pump
B31	DHW temperature sensor bottom (option)			**Q15**	Heating circuit pump
B4	Buffer storage temperature sensor			**SV**	Safety valve
B41	Buffer storage temp. sensor bottom (option)			**PI**	Pressure gauge
B71	Return flow temperature sensor heat pump			**TWW**	Domestic hot water
B9	External temperature sensor	**N11**	Heat pump controller	**Y1**	Heating circuit mixer 1
B91	Brine inlet temperature sensor	**Q2**	Heating circuit pump 1	**ST**	Safety thermostat
B92	Brine outlet temperature sensor	**Q3**	Deflector valve DHW		
EG	Expansion vessel	**Q33**	DHW intermediate circuit pump		
E26	Brine pressure controller				

				DATE	03/2018
				DESIGNER	KAF
				Proved	SW
RESPONSIBLE	CHANGE	DATE	DESIGNER	Standard	SIA 410

OH Inverta Compact 02.20.10 E1 E8

Subject to technical changes.

- Installation of additional components as per local regulations and conditions.
- This presentation is used as planning aid for the concerned installer.

PROJECTproject STANDARD

NAME OF DRAWING OH_I_Compact

Anlage | Funktion | Seite 18

Project Manager PM

No. pgs. 106

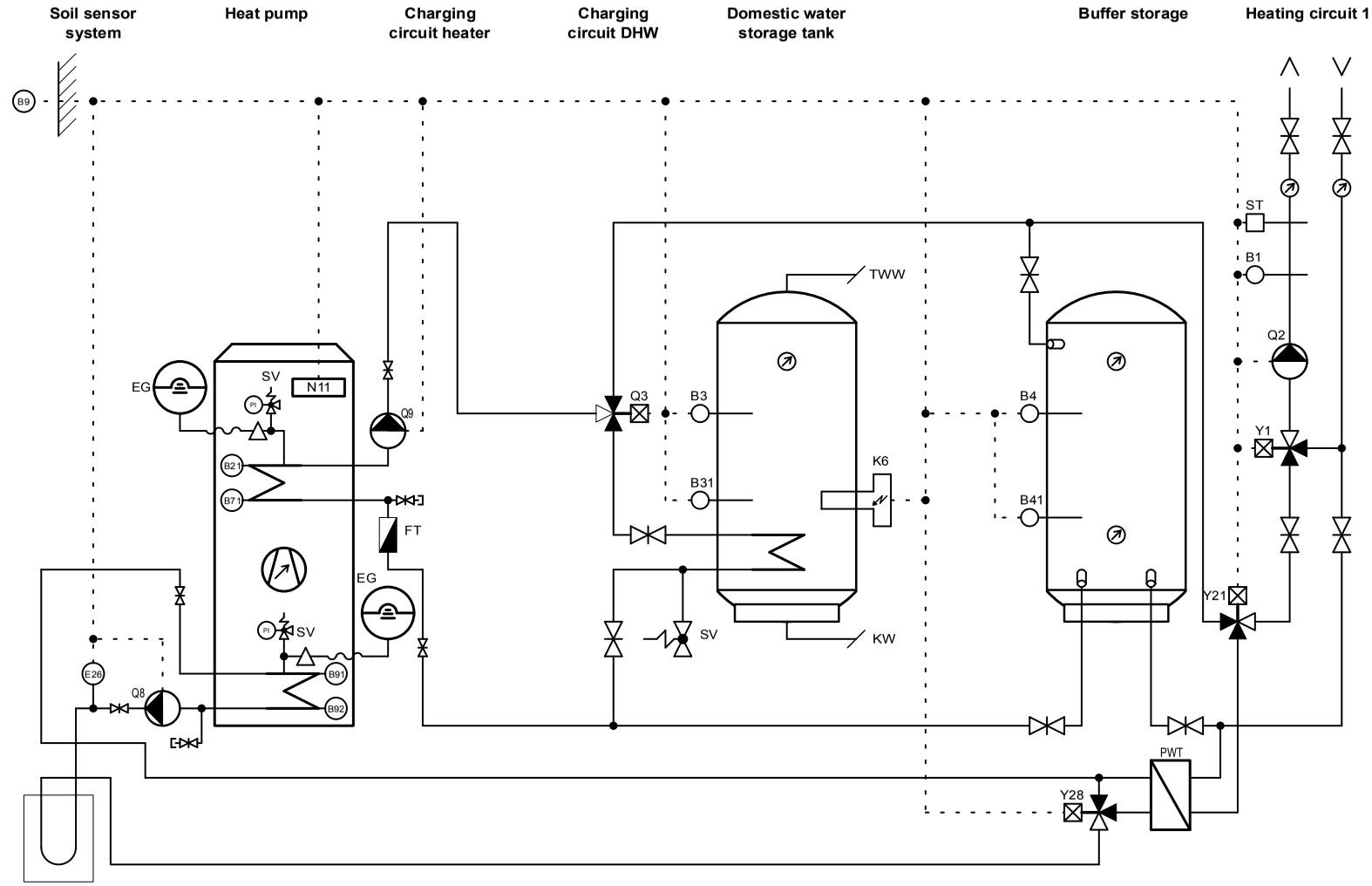

Legend

B1	Flow temperature sensor heating circuit	**FT**	Flow rate sensor	**Q9**	Condenser pump
B21	Flow temperature sensor heat pump	**KW**	Cold water	**SV**	Safety valve
B3	Domestic hot water temperature sensor	**K6**	Electrical heating element DHW (Power contactor+fuse in on-site tableau)	**PI**	Pressure gauge
B31	DHW temperature sensor bottom (option)			**PWT**	Plate heat exchanger (for cooling)
B4	Buffer storage temperature sensor			**TWW**	Domestic hot water
B41	Buffer storage temp. sensor bottom (option)			**Y1**	Heating circuit mixer 1
B71	Return flow temperature sensor heat pump			**Y21**	Deflector valve 230 V heating circuit
B9	External temperature sensor	**N11**	Heat pump controller	**Y28**	Deflector valve 230 V source side
B91	Brine inlet temperature sensor	**Q2**	Heating circuit pump 1	**ST**	Safety thermostat
B92	Brine outlet temperature sensor	**Q3**	Deflector valve DHW		
EG	Expansion vessel	**Q8**	Brine pump		
E26	Brine pressure controller				

				DATE	03/2018
				DESIGNER	KAF
				Proved	SW
RESPONSIBLE	CHANGE	DATE	DESIGNER	Standard	SIA 410

OH Inverta Compact 02.20.10 E6

Subject to technical changes.

- Installation of additional components as per local regulations and conditions.
- This presentation is used as planning aid for the concerned installer.

PROJECTproject STANDARD

NAME OF DRAWING OH_I_Compact

Anlage | Funktion | Seite 19

Project Manager PM

No. pgs. 106

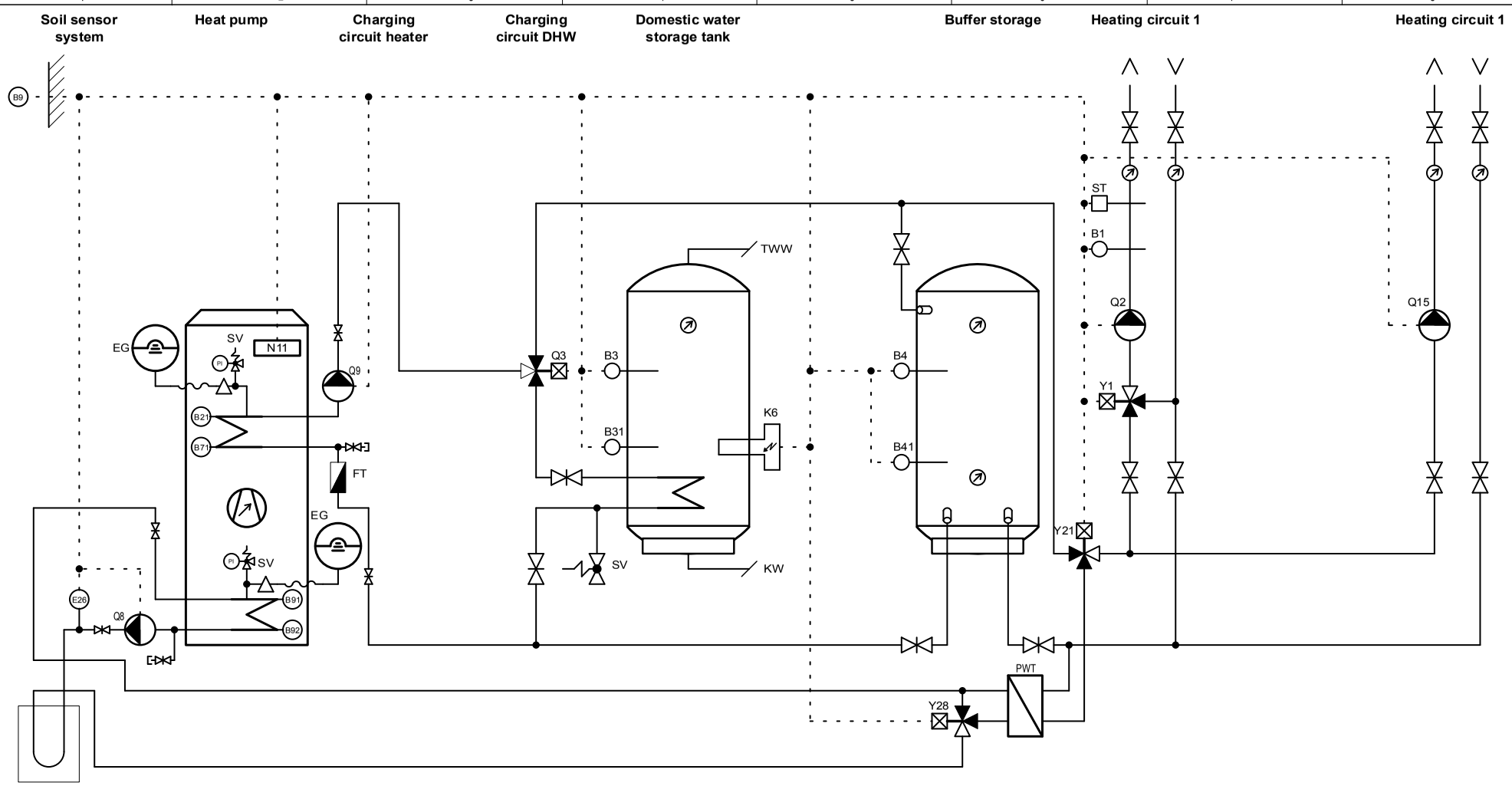

Legend

B1	Flow temperature sensor heating circuit	**FT**	Flow rate sensor	**Q9**	Condenser pump
B21	Flow temperature sensor heat pump	**KW**	Cold water	**Q15**	Heating circuit pump
B3	Domestic hot water temperature sensor	**K6**	Electrical heating element DHW (Power contactor+fuse in on-site tableau)	**SV**	Safety valve
B31	DHW temperature sensor bottom (option)			**PI**	Pressure gauge
B4	Buffer storage temperature sensor			**PWT**	Plate heat exchanger (for cooling)
B41	Buffer storage temp. sensor bottom (option)			**TWW**	Domestic hot water
B71	Return flow temperature sensor heat pump			**Y1**	Heating circuit mixer 1
B9	External temperature sensor	**N11**	Heat pump controller	**Y21**	Deflector valve 230 V heating circuit
B91	Brine inlet temperature sensor	**Q2**	Heating circuit pump 1	**Y28**	Deflector valve 230 V source side
B92	Brine outlet temperature sensor	**Q3**	Deflector valve DHW	**ST**	Safety thermostat
EG	Expansion vessel	**Q8**	Brine pump		
E26	Brine pressure controller				

				DATE	03/2018
				DESIGNER	KAF
				Proved	SW
RESPONSIBLE	CHANGE	DATE	DESIGNER	Standard	SIA 410

OH Inverta Compact 02.20.10 E6 E8

Subject to technical changes.

- Installation of additional components as per local regulations and conditions.
- This presentation is used as planning aid for the concerned installer.

PROJECTproject STANDARD

NAME OF DRAWING OH_I_Compact

Anlage | Funktion | Seite 20

Project Manager PM

No. pgs. 106

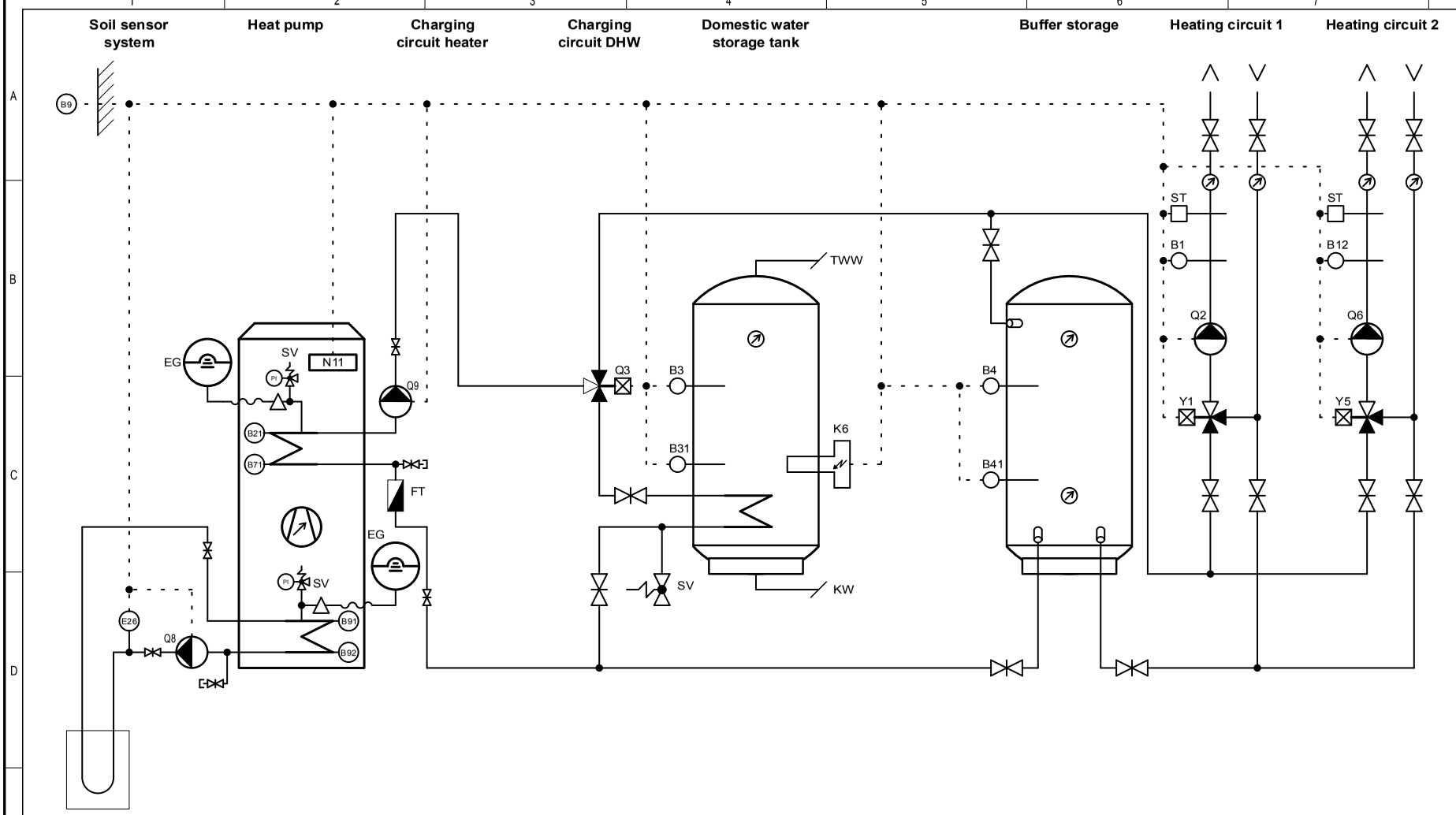

Legend

B1	Flow temperature sensor heating circuit	**E26**	Brine pressure controller	**Q6**	Heating circuit pump 2
B12	Flow temp. sensor heating circuit 2	**FT**	Flow rate sensor	**Q8**	Brine pump
B21	Flow temperature sensor heat pump	**KW**	Cold water	**Q9**	Condenser pump
B3	Domestic hot water temperature sensor	**K6**	Electrical heating element DHW (Power contactor+fuse in on-site tableau)	**SV**	Safety valve
B31	DHW temperature sensor bottom (option)			**PI**	Pressure gauge
B4	Buffer storage temperature sensor			**TWW**	Domestic hot water
B41	Buffer storage temp. sensor bottom (option)			**Y1**	Heating circuit mixer 1
B71	Return flow temperature sensor heat pump			**Y5**	Heating circuit mixer 2
B9	External temperature sensor	**N11**	Heat pump controller	**ST**	Safety thermostat
B91	Brine inlet temperature sensor	**Q2**	Heating circuit pump 1		
B92	Brine outlet temperature sensor	**Q3**	Deflector valve DHW		
EG	Expansion vessel	**Q33**	DHW intermediate circuit pump		

				DATE	03/2018
				DESIGNER	KAF
				Proved	SW
RESPONSIBLE	CHANGE	DATE	DESIGNER	Standard	SIA 410

OH Inverta Compact 02.20.10 E2

Subject to technical changes.

- Installation of additional components as per local regulations and conditions.
- This presentation is used as planning aid for the concerned installer.

PROJECT project: STANDARD

NAME OF DRAWING: OH_I_Compact

Anlage | Funktion | Seite 21

Project Manager: PM

No. pgs. 106

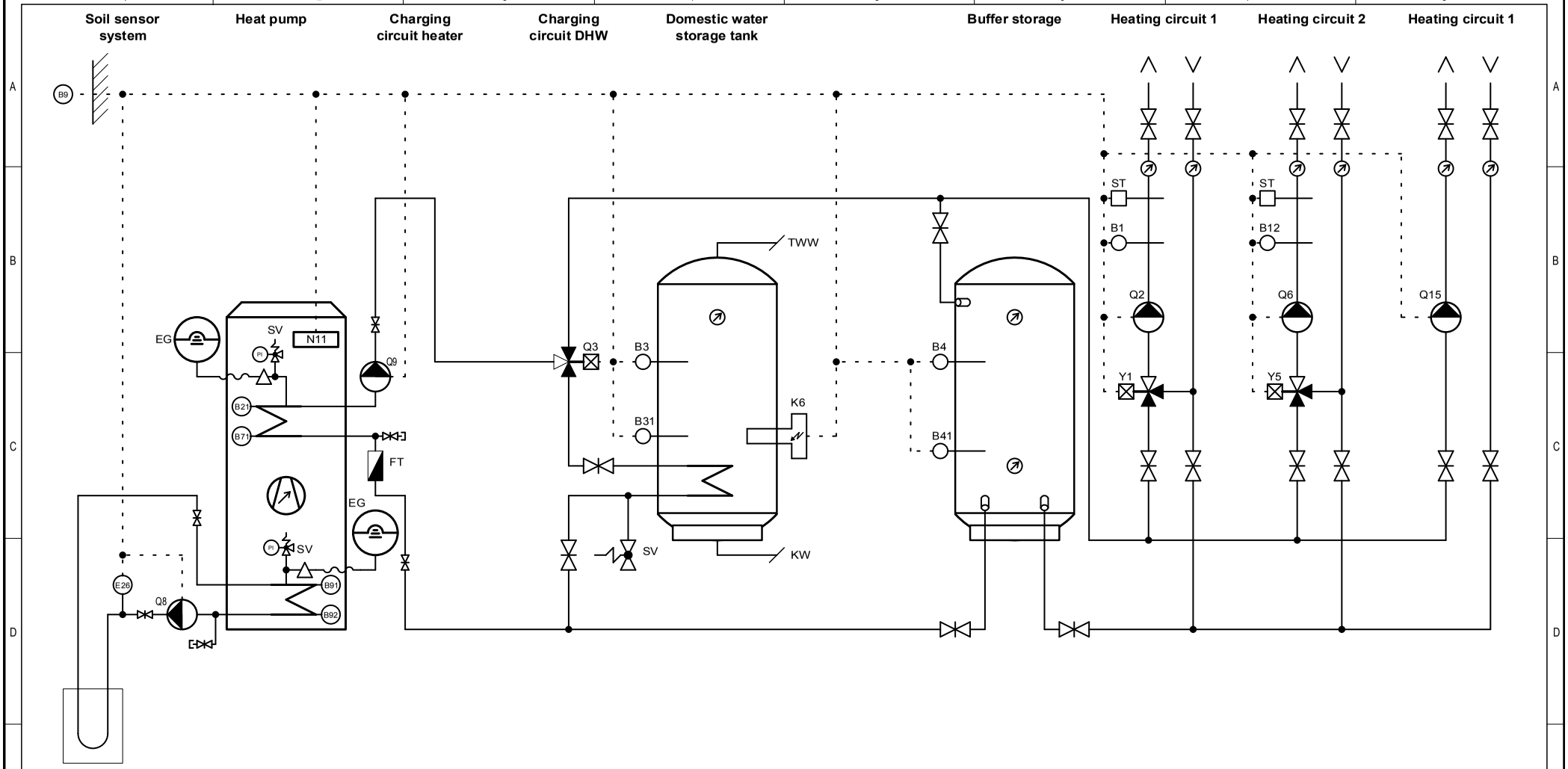

Legend

B1	Flow temperature sensor heating circuit	**E26**	Brine pressure controller	**Q6**	Heating circuit pump 2
B12	Flow temp. sensor heating circuit 2	**FT**	Flow rate sensor	**Q8**	Brine pump
B21	Flow temperature sensor heat pump	**KW**	Cold water	**Q9**	Condenser pump
B3	Domestic hot water temperature sensor	**K6**	Electrical heating element DHW (Power contactor+fuse in on-site tableau)	**Q15**	Heating circuit pump
B31	DHW temperature sensor bottom (option)			**SV**	Safety valve
B4	Buffer storage temperature sensor			**PI**	Pressure gauge
B41	Buffer storage temp. sensor bottom (option)			**TWW**	Domestic hot water
B71	Return flow temperature sensor heat pump			**Y1**	Heating circuit mixer 1
B9	External temperature sensor	**N11**	Heat pump controller	**Y5**	Heating circuit mixer 2
B91	Brine inlet temperature sensor	**Q2**	Heating circuit pump 1	**ST**	Safety thermostat
B92	Brine outlet temperature sensor	**Q3**	Deflector valve DHW		
EG	Expansion vessel	**Q33**	DHW intermediate circuit pump		

RESPONSIBLE	CHANGE	DATE	DESIGNER		
				DATE	03/2018
				DESIGNER	KAF
				Proved	SW
				Standard	SIA 410

OH Inverta Compact 02.20.10 E2 E8

Subject to technical changes.

- Installation of additional components as per local regulations and conditions.
- This presentation is used as planning aid for the concerned installer.

PROJECTproject STANDARD

NAME OF DRAWING OH_I_Compact

Anlage | Funktion | Seite 22

Project Manager PM

No. pgs. 106

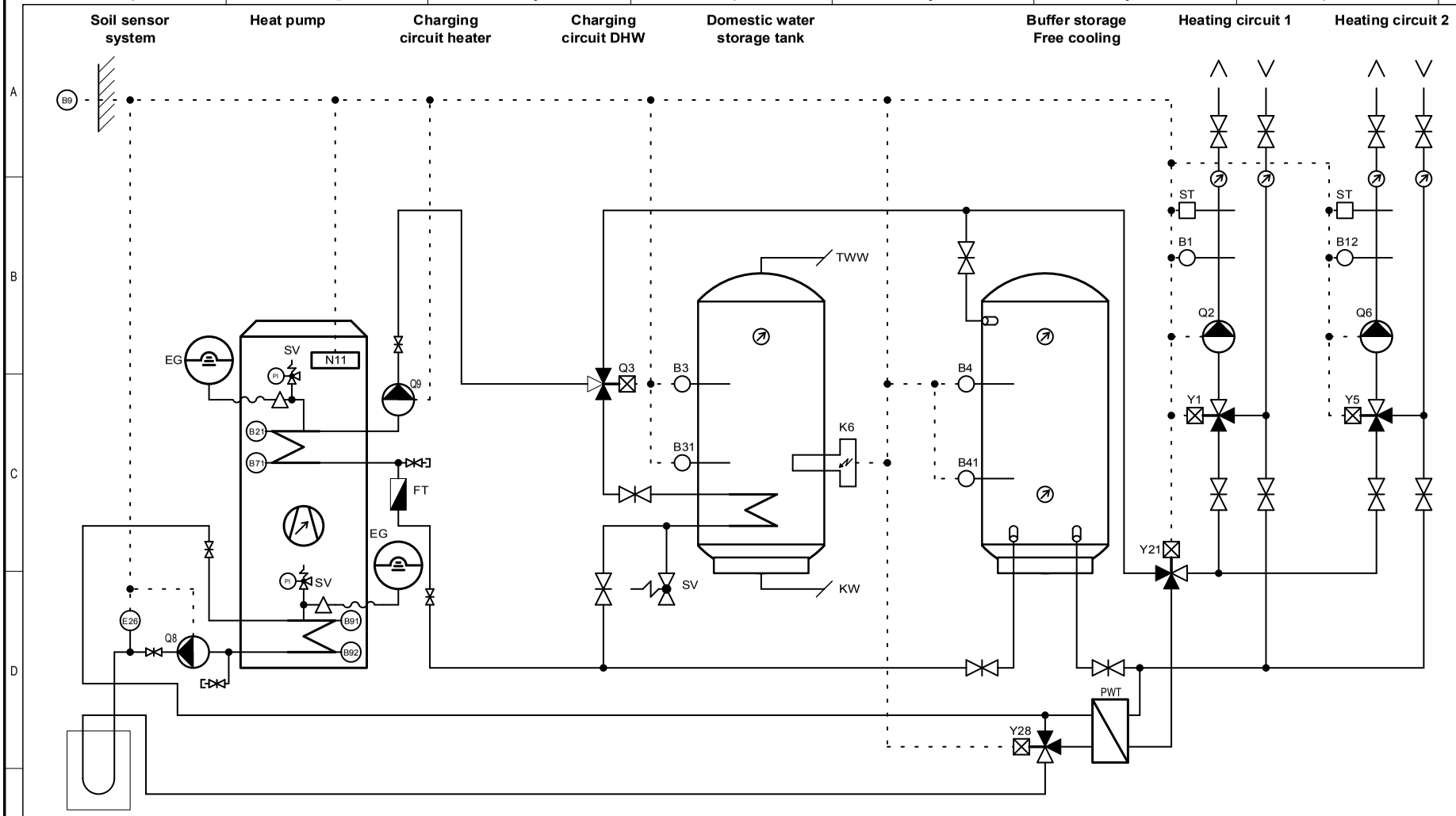

Legend

B1	Flow temperature sensor heating circuit	**E26**	Brine pressure controller	**Q8**	Brine pump
B12	Flow temp. sensor heating circuit 2	**FT**	Flow rate sensor	**Q9**	Condenser pump
B21	Flow temperature sensor heat pump	**KW**	Cold water	**SV**	Safety valve
B3	Domestic hot water temperature sensor	**K6**	Electrical heating element DHW (Power contactor+fuse in on-site tableau)	**PI**	Pressure gauge
B31	DHW temperature sensor bottom (option)			**PWT**	Plate heat exchanger (for cooling)
B4	Buffer storage temperature sensor			**TWW**	Domestic hot water
B41	Buffer storage temp. sensor bottom (option)			**Y1**	Heating circuit mixer 1
B71	Return flow temperature sensor heat pump			**Y5**	Heating circuit mixer 2
B9	External temperature sensor	**N11**	Heat pump controller	**Y21**	Deflector valve 230 V heating circuit
B91	Brine inlet temperature sensor	**Q2**	Heating circuit pump 1	**Y28**	Deflector valve 230 V source side
B92	Brine outlet temperature sensor	**Q3**	Deflector valve DHW	**ST**	Safety thermostat
EG	Expansion vessel	**Q6**	Heating circuit pump 2		

				DATE	03/2018
				DESIGNER	KAF
				Proved	SW
RESPONSIBLE	CHANGE	DATE	DESIGNER	Standard	SIA 410

OH Inverta Compact 02.20.10 E2 E6

Subject to technical changes.

- Installation of additional components as per local regulations and conditions.
- This presentation is used as planning aid for the concerned installer.

PROJECTproject STANDARD

NAME OF DRAWING OH_I_Compact

Anlage | Funktion | Seite 23

Project Manager PM

No. pgs. 106

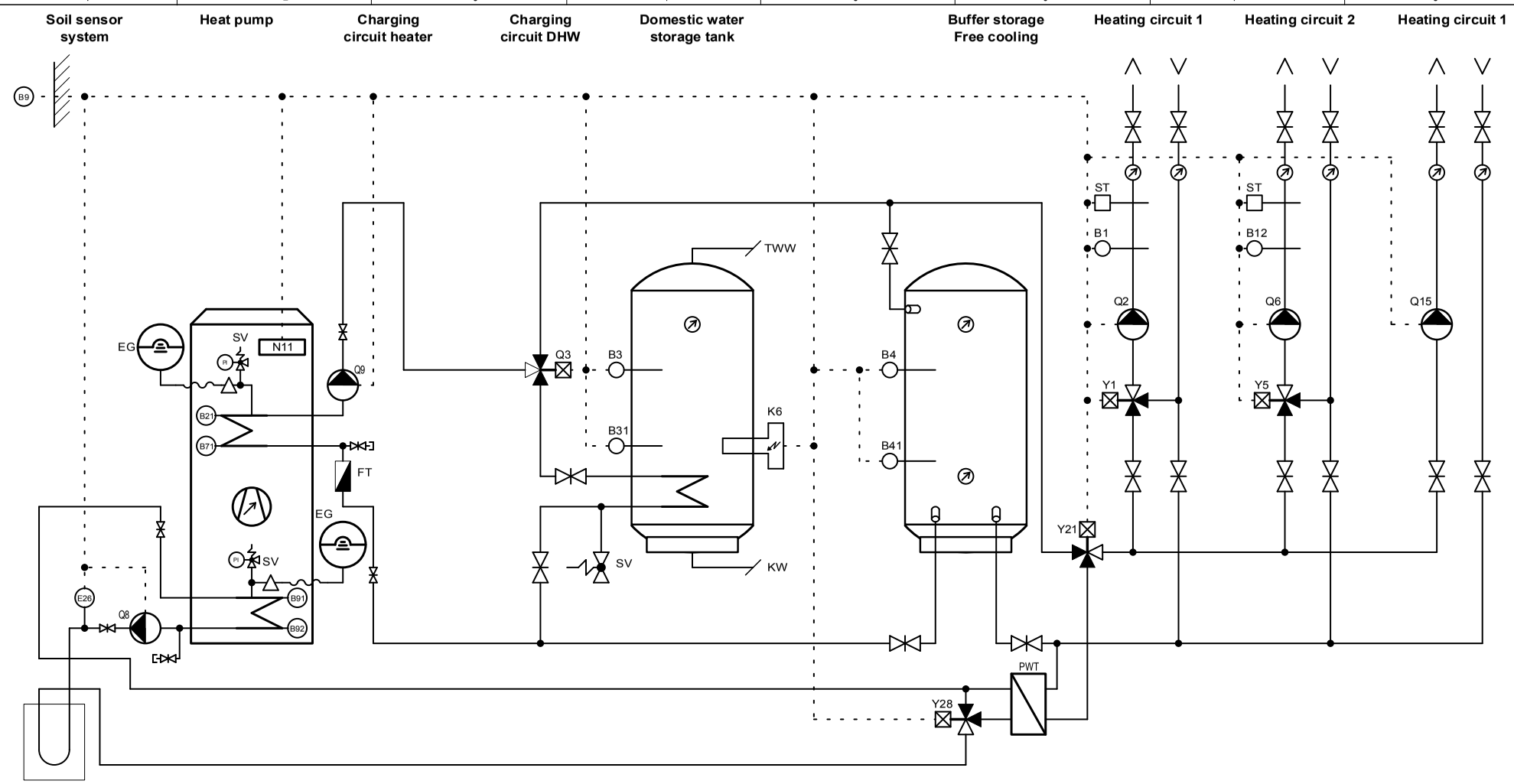

Legend

B1	Flow temperature sensor heating circuit	**E26**	Brine pressure controller	**Q8**	Brine pump
B12	Flow temp. sensor heating circuit 2	**FT**	Flow rate sensor	**Q9**	Condenser pump
B21	Flow temperature sensor heat pump	**KW**	Cold water	**Q15**	Heating circuit pump
B3	Domestic hot water temperature sensor	**K6**	Electrical heating element DHW (Power contactor+fuse in on-site tableau)	**SV**	Safety valve
B31	DHW temperature sensor bottom (option)			**PI**	Pressure gauge
B4	Buffer storage temperature sensor			**PWT**	Plate heat exchanger (for cooling)
B41	Buffer storage temp. sensor bottom (option)			**TWW**	Domestic hot water
B71	Return flow temperature sensor heat pump			**Y1**	Heating circuit mixer 1
B9	External temperature sensor	**N11**	Heat pump controller	**Y5**	Heating circuit mixer 2
B91	Brine inlet temperature sensor	**Q2**	Heating circuit pump 1	**Y21**	Deflector valve 230 V heating circuit
B92	Brine outlet temperature sensor	**Q3**	Deflector valve DHW	**Y28**	Deflector valve 230 V source side
EG	Expansion vessel	**Q6**	Heating circuit pump 2	**ST**	Safety thermostat

				DATE	03/2018
				DESIGNER	KAF
				Proved	SW
RESPONSIBLE	CHANGE	DATE	DESIGNER	Standard	SIA 410

OH Inverta Compact 02.20.10 E2 E6 E8

Subject to technical changes.

- Installation of additional components as per local regulations and conditions.
- This presentation is used as planning aid for the concerned installer.

PROJECTproject STANDARD

NAME OF DRAWING OH_I_Compact

Anlage | Funktion | Seite 24

Project Manager PM

No. pgs. 106

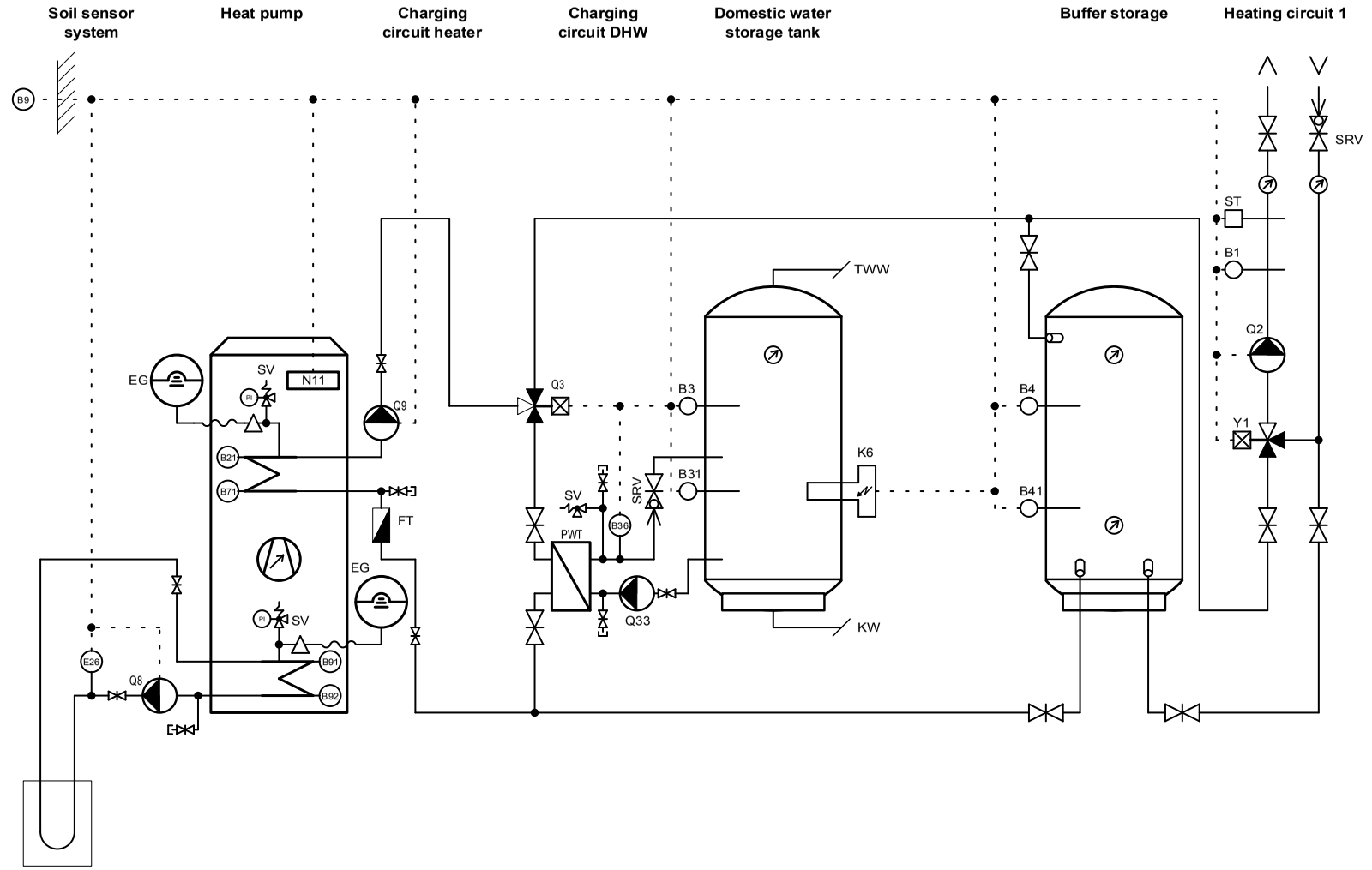

Legend

B1 Flow temperature sensor heating circuit
B21 Flow temperature sensor heat pump
B3 Domestic hot water temperature sensor
B31 DHW temperature sensor bottom (option)
B36 DHW charging temperature sensor
B4 Buffer storage temperature sensor
B41 Buffer storage temp. sensor bottom (option)
B71 Return flow temperature sensor heat pump
B9 External temperature sensor
B91 Brine inlet temperature sensor
B92 Brine outlet temperature sensor
EG Expansion vessel

E26 Brine pressure controller
FT Flow rate sensor
KW Cold water
K6 Electrical heating element DHW (Power contactor+fuse in on-site tableau)

N11 Heat pump controller
PWT Plate heat exchanger (for cooling)
Q2 Heating circuit pump 1
Q3 Deflector valve DHW

Q33 DHW intermediate circuit pump
Q8 Brine pump
Q9 Condenser pump
SRV Balancing valve
SV Safety valve
PI Pressure gauge
TWW Domestic hot water
Y1 Heating circuit mixer 1
ST Safety thermostat

				DATE	03/2018
				DESIGNER	KAF
				Proved	SW
RESPONSIBLE	CHANGE	DATE	DESIGNER	Standard	SIA 410

OH Inverta Compact 02.20.10 E42

Subject to technical changes.

- Installation of additional components as per local regulations and conditions.
- This presentation is used as planning aid for the concerned installer.

PROJECTproject STANDARD
NAME OF DRAWING OH_I_Compact

Anlage	Funktion	Seite
		25
Project Manager		
PM		No. pgs. 106

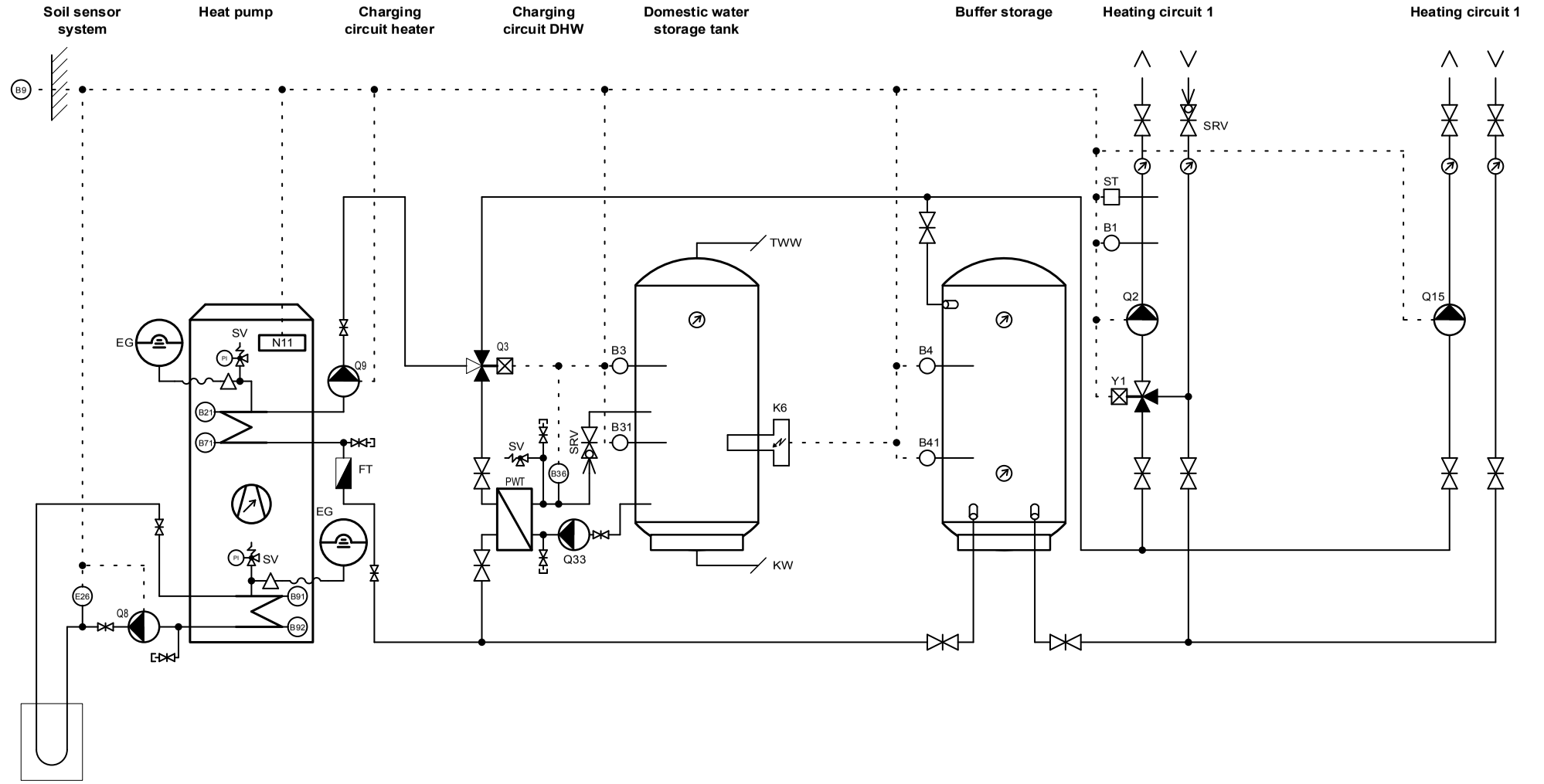

Legend

B1	Flow temperature sensor heating circuit	**E26**	Brine pressure controller	**Q33**	DHW intermediate circuit pump
B21	Flow temperature sensor heat pump	**FT**	Flow rate sensor	**Q8**	Brine pump
B3	Domestic hot water temperature sensor	**KW**	Cold water	**Q9**	Condenser pump
B31	DHW temperature sensor bottom (option)	**K6**	Electrical heating element DHW (Power contactor+fuse in on-site tableau)	**Q15**	Heating circuit pump
B36	DHW charging temperature sensor			**SRV**	Balancing valve
B4	Buffer storage temperature sensor			**SV**	Safety valve
B41	Buffer storage temp. sensor bottom (option)			**PI**	Pressure gauge
B71	Return flow temperature sensor heat pump			**TWW**	Domestic hot water
B9	External temperature sensor	**N11**	Heat pump controller	**Y1**	Heating circuit mixer 1
B91	Brine inlet temperature sensor	**PWT**	Plate heat exchanger (for cooling)	**ST**	Safety thermostat
B92	Brine outlet temperature sensor	**Q2**	Heating circuit pump 1		
EG	Expansion vessel	**Q3**	Deflector valve DHW		

RESPONSIBLE	CHANGE	DATE	DESIGNER		
				DATE	03/2018
				DESIGNER	KAF
				Proved	SW
				Standard	SIA 410

OH Inverta Compact 02.20.10 E8 E42

Subject to technical changes.

- Installation of additional components as per local regulations and conditions.
- This presentation is used as planning aid for the concerned installer.

PROJECTproject STANDARD

NAME OF DRAWING OH_I_Compact

Anlage	Funktion	Seite
		26

Project Manager PM

No. pgs. 106

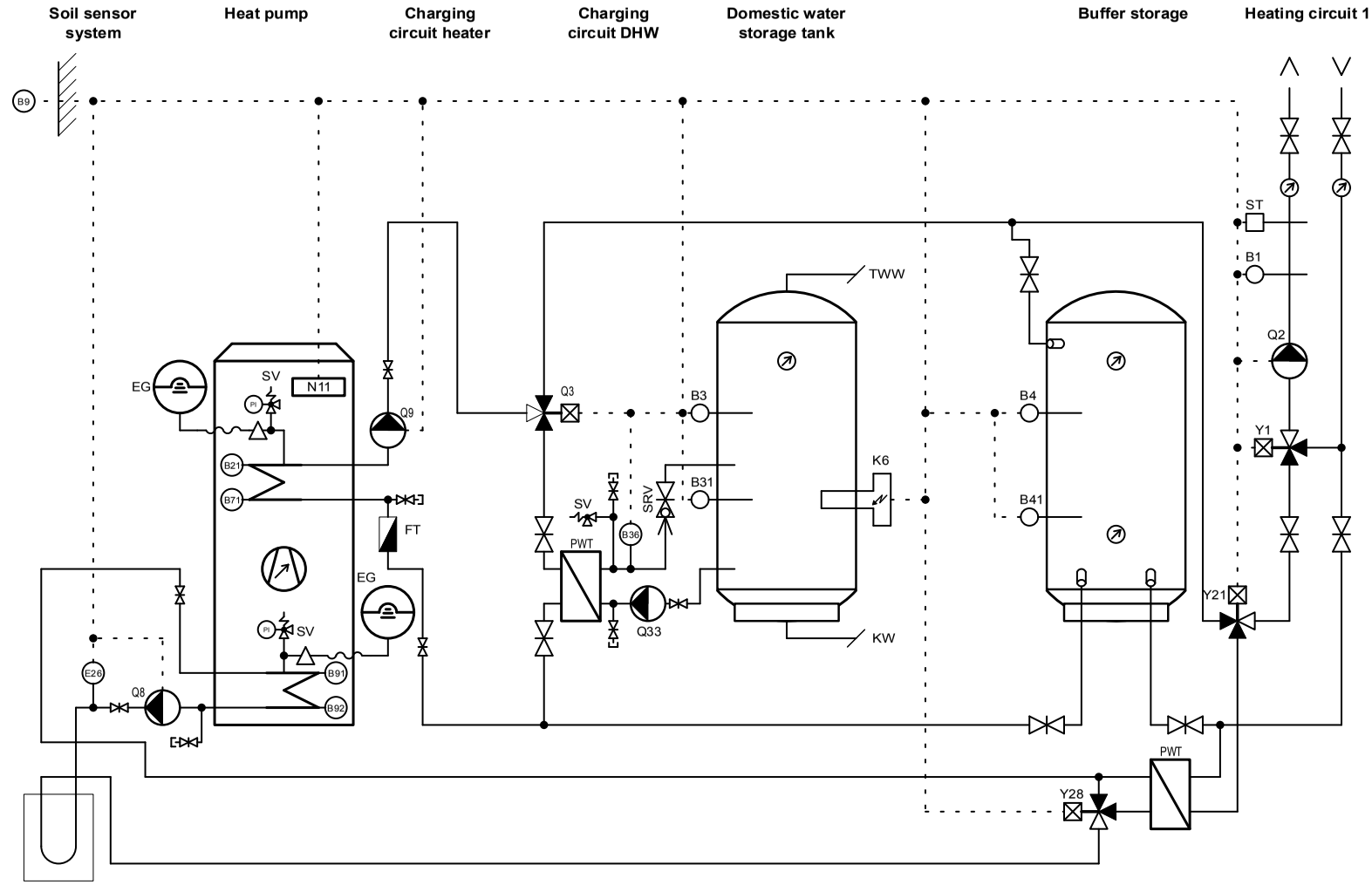

Legend

B1	Flow temperature sensor heating circuit	**E26**	Brine pressure controller	**Q9**	Condenser pump
B21	Flow temperature sensor heat pump	**FT**	Flow rate sensor	**Q33**	DHW intermediate circuit pump
B3	Domestic hot water temperature sensor	**KW**	Cold water	**SRV**	Balancing valve
B31	DHW temperature sensor bottom (option)	**K6**	Electrical heating element DHW (Power contactor+fuse in on-site tableau)	**SV**	Safety valve
B36	DHW charging temperature sensor			**PI**	Pressure gauge
B4	Buffer storage temperature sensor			**PWT**	Plate heat exchanger (for cooling)
B41	Buffer storage temp. sensor bottom (option)			**TWW**	Domestic hot water
B71	Return flow temperature sensor heat pump			**Y1**	Heating circuit mixer 1
B9	External temperature sensor	**N11**	Heat pump controller	**Y21**	Deflector valve 230 V heating circuit
B91	Brine inlet temperature sensor	**Q2**	Heating circuit pump 1	**Y28**	Deflector valve 230 V source side
B92	Brine outlet temperature sensor	**Q3**	Deflector valve DHW	**ST**	Safety thermostat
EG	Expansion vessel	**Q8**	Brine pump		

				DATE	03/2018
				DESIGNER	KAF
				Proved	SW
RESPONSIBLE	CHANGE	DATE	DESIGNER	Standard	SIA 410

OH Inverta Compact 02.20.10 E6 E42

Subject to technical changes.

- Installation of additional components as per local regulations and conditions.
- This presentation is used as planning aid for the concerned installer.

PROJECTproject STANDARD

NAME OF DRAWING OH_I_Compact

Anlage | Funktion | Seite 27

Project Manager PM

No. pgs. 106

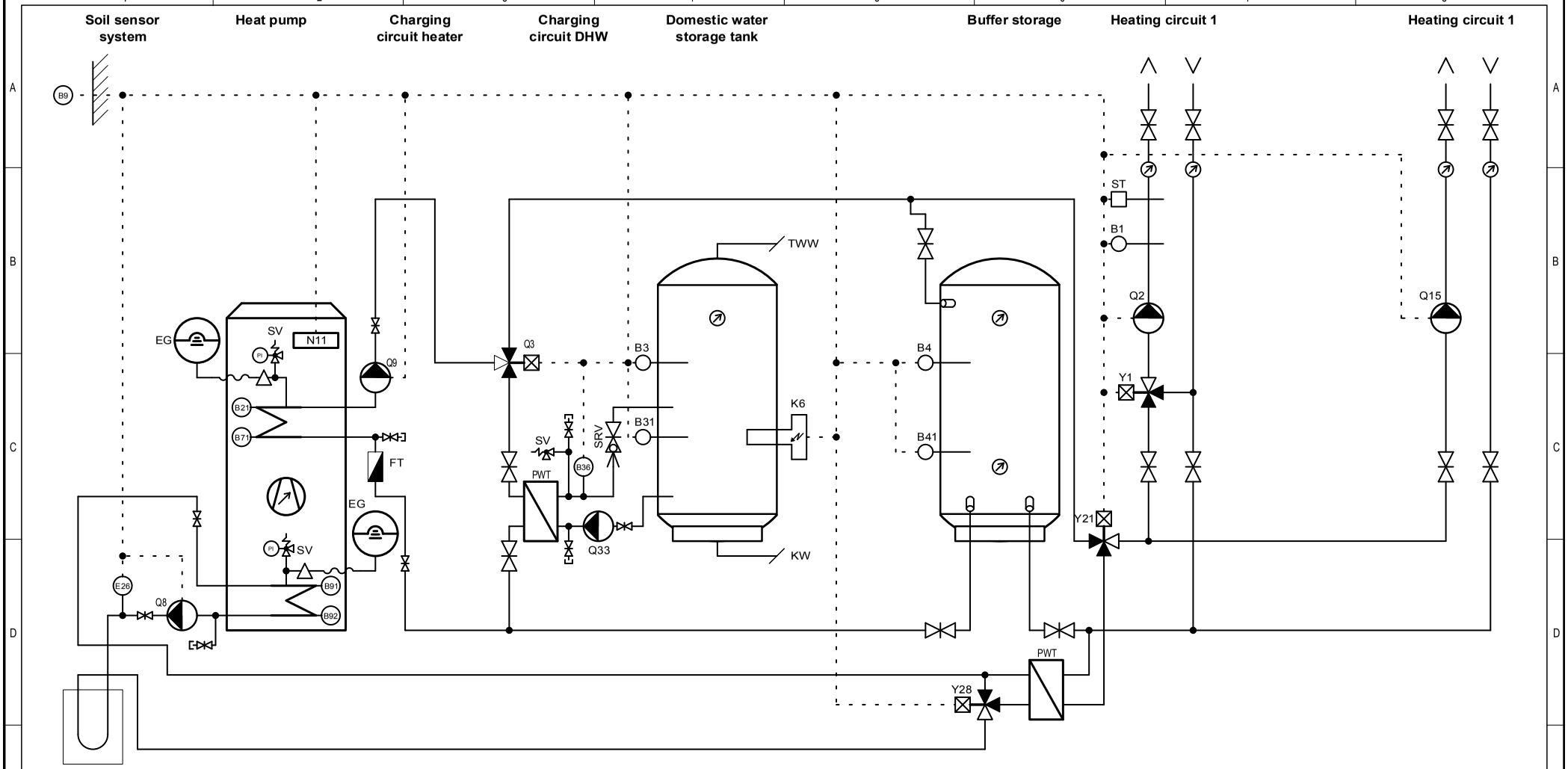

Legend

B1	Flow temperature sensor heating circuit	**E26**	Brine pressure controller	**Q9**	Condenser pump
B21	Flow temperature sensor heat pump	**FT**	Flow rate sensor	**Q15**	Heating circuit pump
B3	Domestic hot water temperature sensor	**KW**	Cold water	**Q33**	DHW intermediate circuit pump
B31	DHW temperature sensor bottom (option)	**K6**	Electrical heating element DHW (Power contactor+fuse in on-site tableau)	**SRV**	Balancing valve
B36	DHW charging temperature sensor			**SV**	Safety valve
B4	Buffer storage temperature sensor			**PI**	Pressure gauge
B41	Buffer storage temp. sensor bottom (option)			**PWT**	Plate heat exchanger (for cooling)
B71	Return flow temperature sensor heat pump			**TWW**	Domestic hot water
B9	External temperature sensor	**N11**	Heat pump controller	**Y1**	Heating circuit mixer 1
B91	Brine inlet temperature sensor	**Q2**	Heating circuit pump 1	**Y21**	Deflector valve 230 V heating circuit
B92	Brine outlet temperature sensor	**Q3**	Deflector valve DHW	**Y28**	Deflector valve 230 V source side
EG	Expansion vessel	**Q8**	Brine pump	**ST**	Safety thermostat

				DATE	03/2018
				DESIGNER	KAF
				Proved	SW
RESPONSIBLE	CHANGE	DATE	DESIGNER	Standard	SIA 410

OH Inverta Compact 02.20.10 E6 E8 E42

Subject to technical changes.

- Installation of additional components as per local regulations and conditions.
- This presentation is used as planning aid for the concerned installer.

PROJECTproject STANDARD

NAME OF DRAWING OH_I_Compact

Anlage | Funktion | Seite 28

Project Manager PM

No. pgs. 106

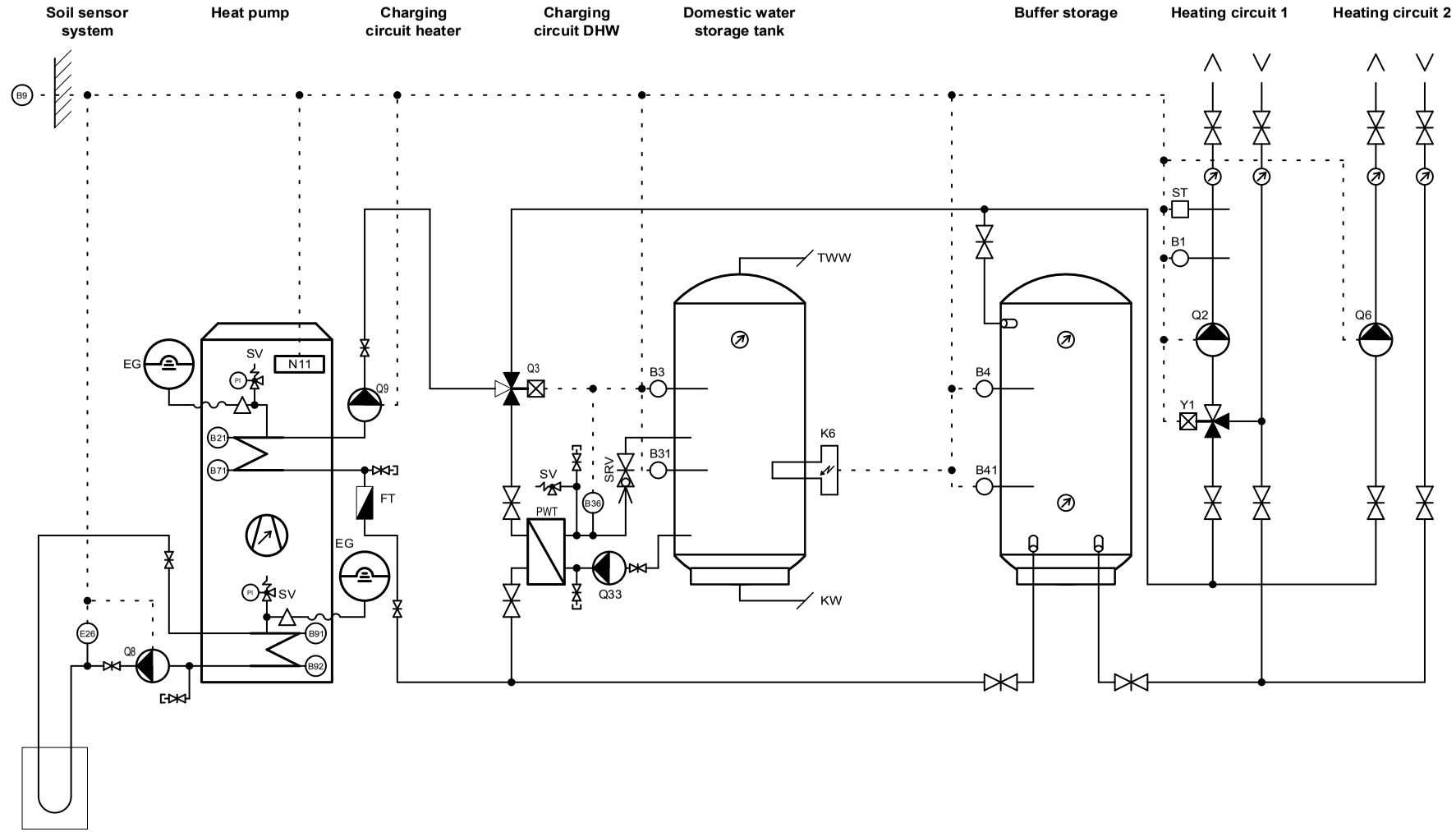

Legend

B1 Flow temperature sensor heating circuit
B21 Flow temperature sensor heat pump
B3 Domestic hot water temperature sensor
B31 DHW temperature sensor bottom (option)
B36 DHW charging temperature sensor
B4 Buffer storage temperature sensor
B41 Buffer storage temp. sensor bottom (option)
B71 Return flow temperature sensor heat pump
B9 External temperature sensor
B91 Brine inlet temperature sensor
B92 Brine outlet temperature sensor
EG Expansion vessel

E26 Brine pressure controller
FT Flow rate sensor
KW Cold water
K6 Electrical heating element DHW (Power contactor+fuse in on-site tableau)

N11 Heat pump controller
Q2 Heating circuit pump 1
Q3 Deflector valve DHW
Q33 DHW intermediate circuit pump

Q8 Brine pump
Q9 Condenser pump
PWT Plate heat exchanger (for cooling)
SRV Balancing valve
SV Safety valve
PI Pressure gauge
TWW Domestic hot water
Y1 Heating circuit mixer 1
ST Safety thermostat

				DATE	03/2018
				DESIGNER	KAF
				Proved	SW
RESPONSIBLE	CHANGE	DATE	DESIGNER	Standard	SIA 410

OH Inverta Compact 02.20.10 E1 E42

Subject to technical changes.

- Installation of additional components as per local regulations and conditions.
- This presentation is used as planning aid for the concerned installer.

PROJECTproject STANDARD
NAME OF DRAWING OH_I_Compact

Anlage | Funktion | Seite 29
Project Manager PM
No. pgs. 106

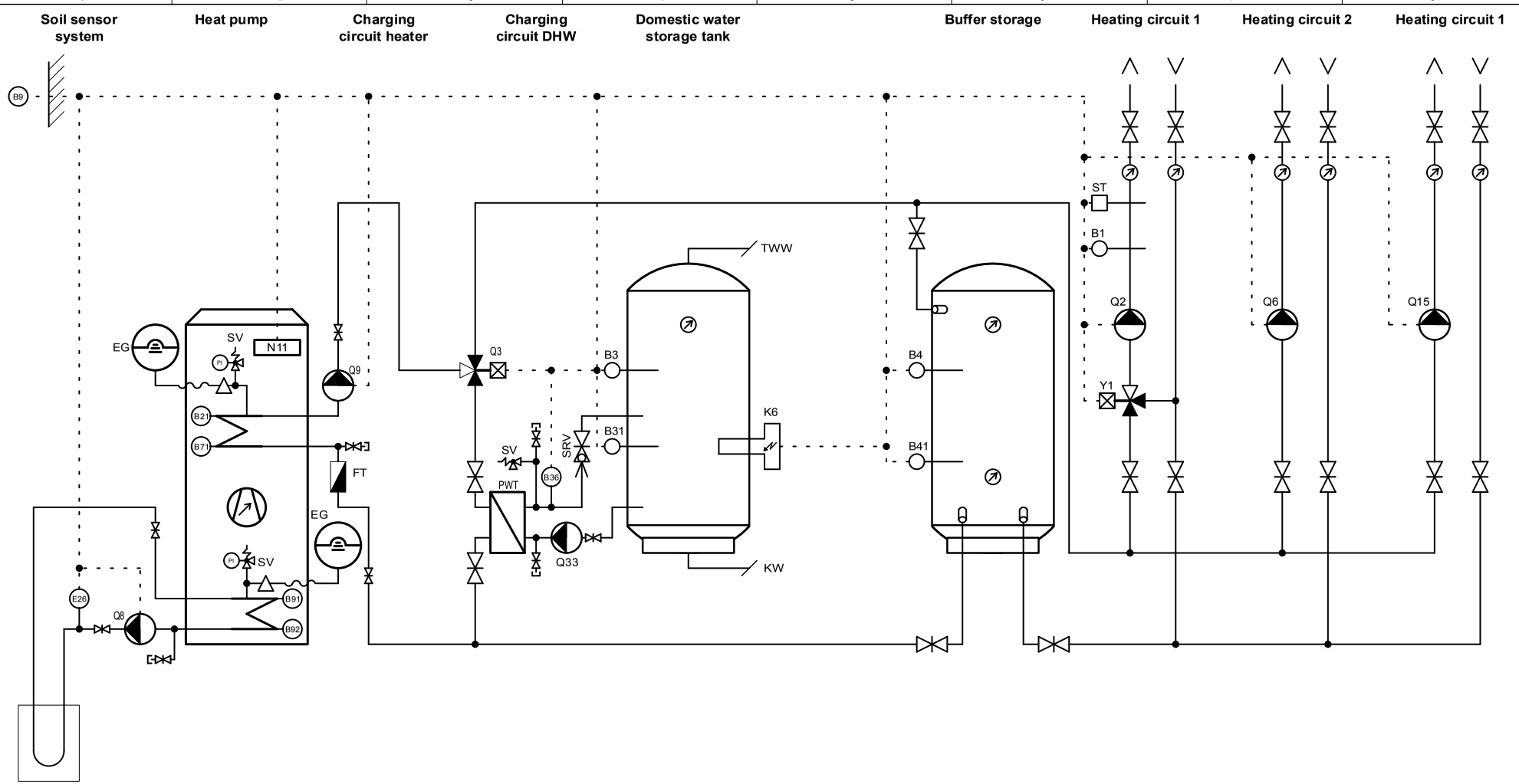

Legend

B1	Flow temperature sensor heating circuit	**E26**	Brine pressure controller	**Q8**	Brine pump
B21	Flow temperature sensor heat pump	**FT**	Flow rate sensor	**Q9**	Condenser pump
B3	Domestic hot water temperature sensor	**KW**	Cold water	**Q15**	Heating circuit pump
B31	DHW temperature sensor bottom (option)	**K6**	Electrical heating element DHW (Power contactor+fuse in on-site tableau)	**PWT**	Plate heat exchanger (for cooling)
B36	DHW charging temperature sensor			**SRV**	Balancing valve
B4	Buffer storage temperature sensor			**SV**	Safety valve
B41	Buffer storage temp. sensor bottom (option)			**PI**	Pressure gauge
B71	Return flow temperature sensor heat pump			**TWW**	Domestic hot water
B9	External temperature sensor	**N11**	Heat pump controller	**Y1**	Heating circuit mixer 1
B91	Brine inlet temperature sensor	**Q2**	Heating circuit pump 1	**ST**	Safety thermostat
B92	Brine outlet temperature sensor	**Q3**	Deflector valve DHW		
EG	Expansion vessel	**Q33**	DHW intermediate circuit pump		

RESPONSIBLE	CHANGE	DATE	DESIGNER		
				DATE	03/2018
				DESIGNER	KAF
				Proved	SW
				Standard	SIA 410

OH Inverta Compact 02.20.10 E1 E8 E42

Subject to technical changes.

- Installation of additional components as per local regulations and conditions.
- This presentation is used as planning aid for the concerned installer.

PROJECTproject STANDARD

NAME OF DRAWING OH_I_Compact

Anlage | Funktion | Seite 30

Project Manager PM

No. pgs. 106

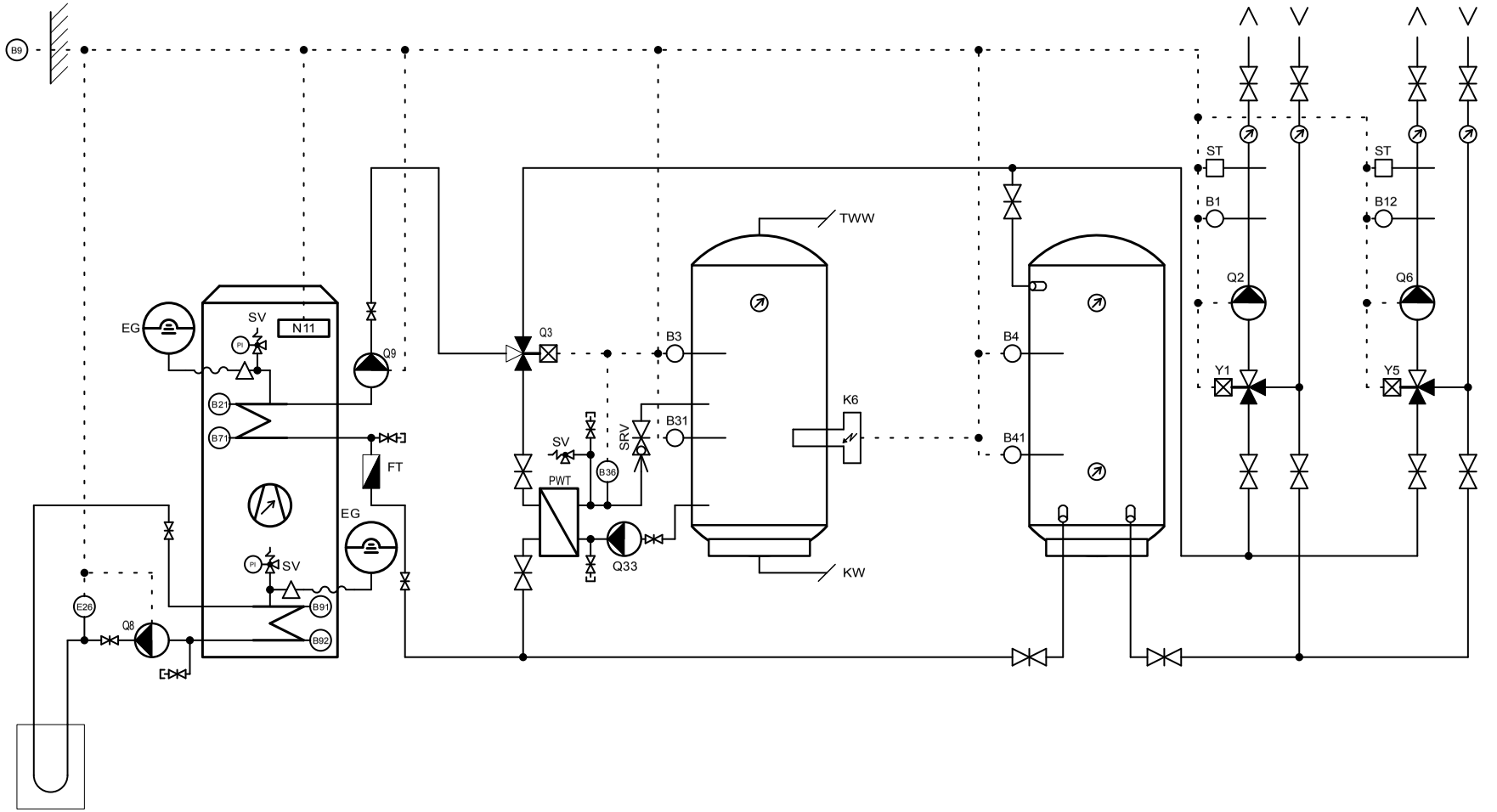

Legend

B1	Flow temperature sensor heating circuit	**E26**	Brine pressure controller	**Q8**	Brine pump
B21	Flow temperature sensor heat pump	**FT**	Flow rate sensor	**Q9**	Condenser pump
B3	Domestic hot water temperature sensor	**KW**	Cold water	**PWT**	Plate heat exchanger (for cooling)
B31	DHW temperature sensor bottom (option)	**K6**	Electrical heating element DHW (Power contactor+fuse in on-site tableau)	**SRV**	Balancing valve
B36	DHW charging temperature sensor			**SV**	Safety valve
B4	Buffer storage temperature sensor			**PI**	Pressure gauge
B41	Buffer storage temp. sensor bottom (option)			**TWW**	Domestic hot water
B71	Return flow temperature sensor heat pump			**Y1**	Heating circuit mixer 1
B9	External temperature sensor	**N11**	Heat pump controller	**Y5**	Heating circuit mixer 2
B91	Brine inlet temperature sensor	**Q2**	Heating circuit pump 1	**ST**	Safety thermostat
B92	Brine outlet temperature sensor	**Q3**	Deflector valve DHW		
EG	Expansion vessel	**Q33**	DHW intermediate circuit pump		

RESPONSIBLE	CHANGE	DATE	DESIGNER		
				DATE	03/2018
				DESIGNER	KAF
				Proved	SW
				Standard	SIA 410

OH Inverta Compact 02.20.10 E2 E42

Subject to technical changes.

- Installation of additional components as per local regulations and conditions.
- This presentation is used as planning aid for the concerned installer.

PROJECTproject: STANDARD

NAME OF DRAWING: OH_I_Compact

Anlage	Funktion	Seite
		31

Project Manager: PM

No. pgs. 106

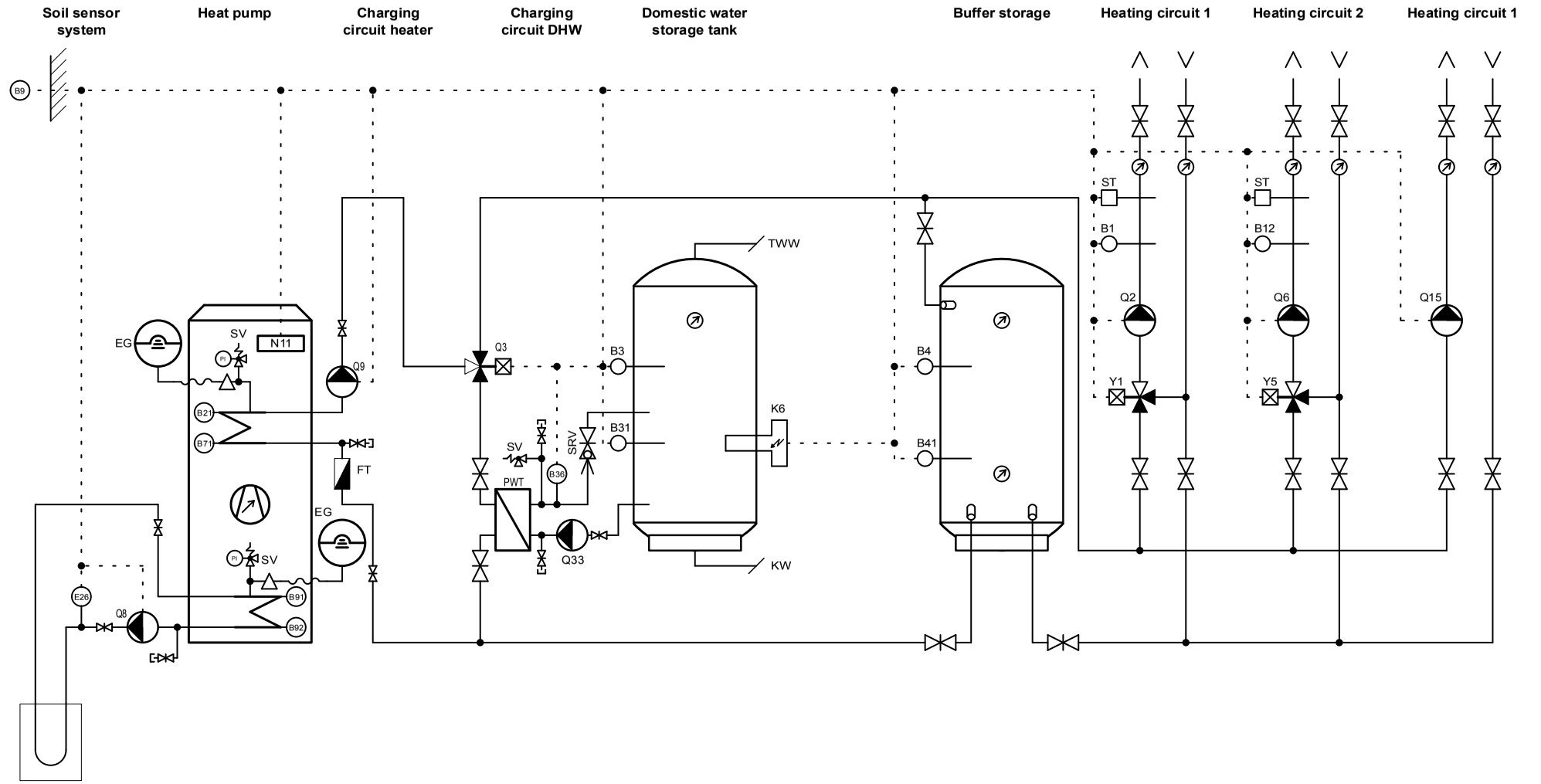

Legend

B1	Flow temperature sensor heating circuit	**E26**	Brine pressure controller	**Q8**	Brine pump
B21	Flow temperature sensor heat pump	**FT**	Flow rate sensor	**Q9**	Condenser pump
B3	Domestic hot water temperature sensor	**KW**	Cold water	**Q15**	Heating circuit pump
B31	DHW temperature sensor bottom (option)	**K6**	Electrical heating element DHW (Power contactor+fuse in on-site tableau)	**PWT**	Plate heat exchanger (for cooling)
B36	DHW charging temperature sensor			**SRV**	Balancing valve
B4	Buffer storage temperature sensor			**SV**	Safety valve
B41	Buffer storage temp. sensor bottom (option)			**PI**	Pressure gauge
B71	Return flow temperature sensor heat pump			**TWW**	Domestic hot water
B9	External temperature sensor	**N11**	Heat pump controller	**Y1**	Heating circuit mixer 1
B91	Brine inlet temperature sensor	**Q2**	Heating circuit pump 1	**Y5**	Heating circuit mixer 2
B92	Brine outlet temperature sensor	**Q3**	Deflector valve DHW	**ST**	Safety thermostat
EG	Expansion vessel	**Q33**	DHW intermediate circuit pump		

RESPONSIBLE	CHANGE	DATE	DESIGNER		
				DATE	03/2018
				DESIGNER	KAF
				Proved	SW
				Standard	SIA 410

OH Inverta Compact 02.20.10 E2 E8 E42

Subject to technical changes.

- Installation of additional components as per local regulations and conditions.
- This presentation is used as planning aid for the concerned installer.

PROJECTproject STANDARD

NAME OF DRAWING OH_I_Compact

Anlage | Funktion | Seite 32

Project Manager PM

No. pgs. 106

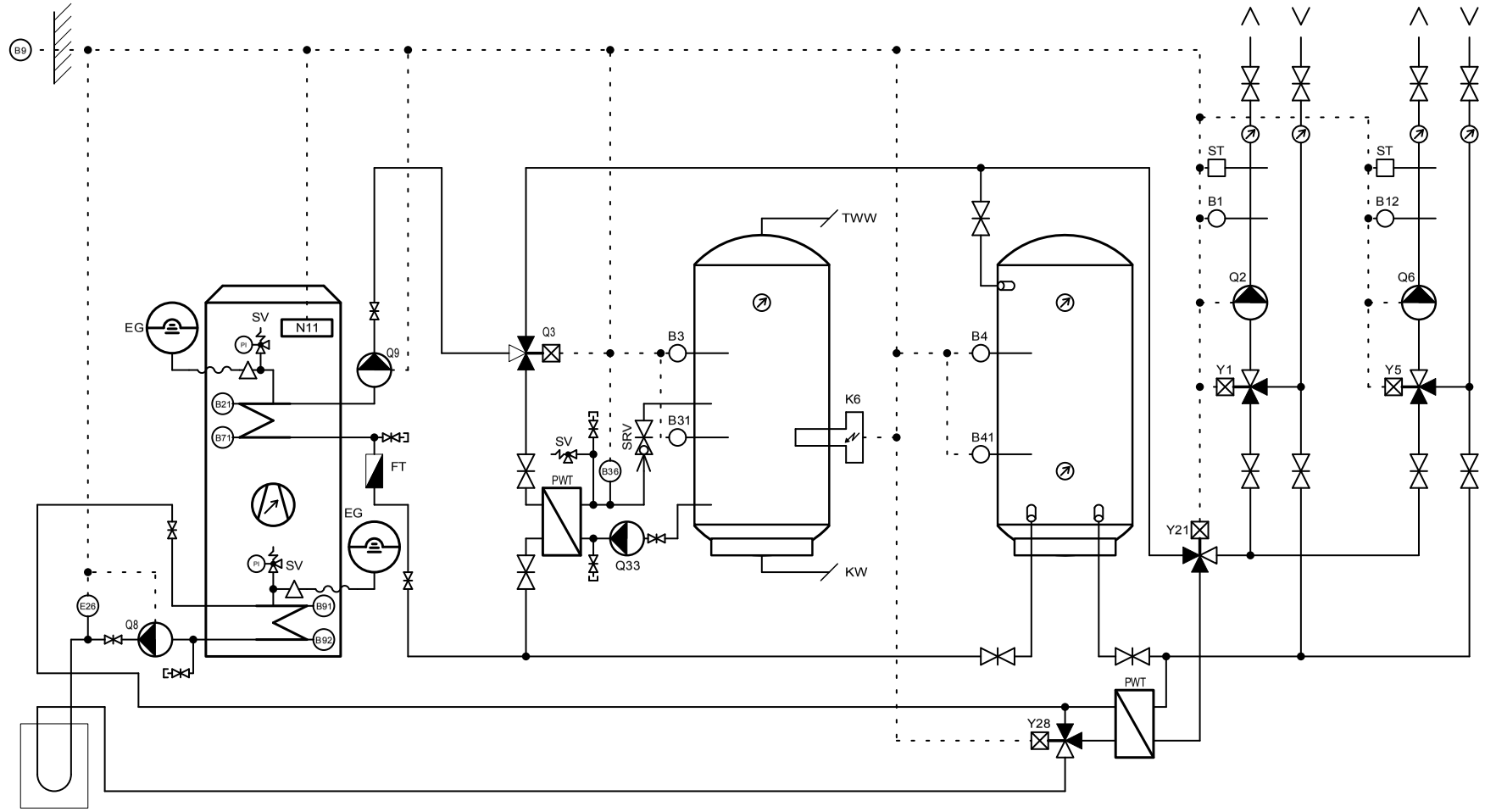

Legend

B1	Flow temperature sensor heating circuit						
B12	Flow temp. sensor heating circuit 2	**EG**	Expansion vessel	**Q3**	Deflector valve DHW	**Y5**	Heating circuit mixer 2
B21	Flow temperature sensor heat pump	**E26**	Brine pressure controller	**Q33**	DHW intermediate circuit pump	**Y21**	Deflector valve 230 V heating circuit
B3	Domestic hot water temperature sensor	**FT**	Flow rate sensor	**Q6**	Heating circuit pump 2	**Y28**	Deflector valve 230 V source side
B31	DHW temperature sensor bottom (option)	**KW**	Cold water	**Q8**	Brine pump	**ST**	Safety thermostat
B36	DHW charging temperature sensor	**K6**	Electrical heating element DHW (Power contactor+fuse in on-site tableau)	**Q9**	Condenser pump		
B4	Buffer storage temperature sensor			**SRV**	Balancing valve		
B41	Buffer storage temp. sensor bottom (option)			**SV**	Safety valve		
B71	Return flow temperature sensor heat pump			**PI**	Pressure gauge		
B9	External temperature sensor			**PWT**	Plate heat exchanger (for cooling)		
B91	Brine inlet temperature sensor	**N11**	Heat pump controller	**TWW**	Domestic hot water		
B92	Brine outlet temperature sensor	**Q2**	Heating circuit pump 1	**Y1**	Heating circuit mixer 1		

				DATE	03/2018
				DESIGNER	KAF
				Proved	SW
RESPONSIBLE	CHANGE	DATE	DESIGNER	Standard	SIA 410

OH Inverta Compact 02.20.10 E2 E6 E42

Subject to technical changes.

- Installation of additional components as per local regulations and conditions.
- This presentation is used as planning aid for the concerned installer.

PROJECTproject STANDARD

NAME OF DRAWING OH_I_Compact

Anlage	Funktion	Seite
		33
Project Manager		
PM		No. pgs. 106

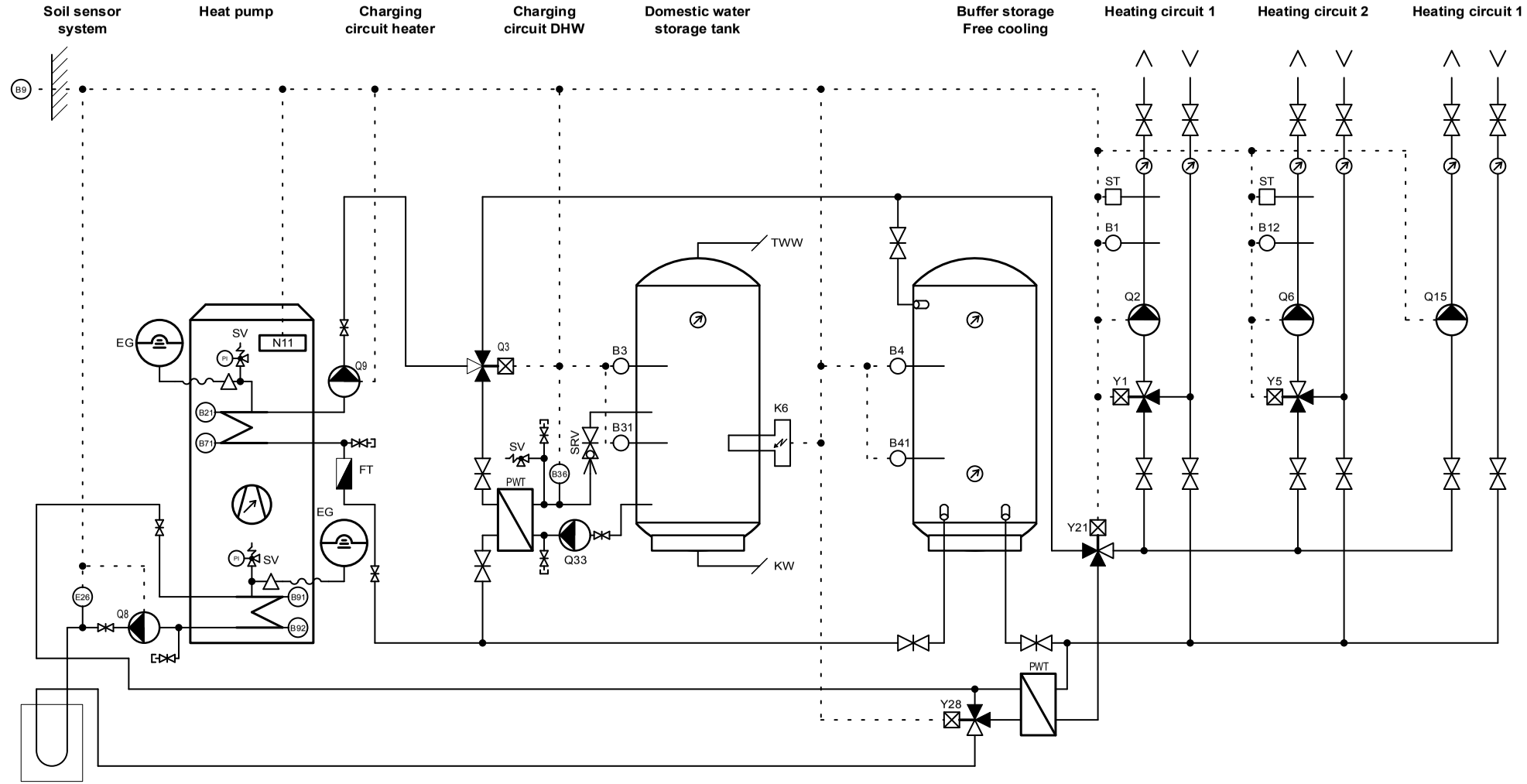

Legend

B1	Flow temperature sensor heating circuit						
B12	Flow temp. sensor heating circuit 2	**EG**	Expansion vessel	**Q3**	Deflector valve DHW	**Y1**	Heating circuit mixer 1
B21	Flow temperature sensor heat pump	**E26**	Brine pressure controller	**Q33**	DHW intermediate circuit pump	**Y5**	Heating circuit mixer 2
B3	Domestic hot water temperature sensor	**FT**	Flow rate sensor	**Q6**	Heating circuit pump 2	**Y21**	Deflector valve 230 V heating circuit
B31	DHW temperature sensor bottom (option)	**KW**	Cold water	**Q8**	Brine pump	**Y28**	Deflector valve 230 V source side
B36	DHW charging temperature sensor	**K6**	Electrical heating element DHW (Power contactor+fuse in on-site tableau)	**Q9**	Condenser pump	**ST**	Safety thermostat
B4	Buffer storage temperature sensor			**Q15**	Heating circuit pump		
B41	Buffer storage temp. sensor bottom (option)			**SRV**	Balancing valve		
B71	Return flow temperature sensor heat pump			**SV**	Safety valve		
B9	External temperature sensor			**PI**	Pressure gauge		
B91	Brine inlet temperature sensor	**N11**	Heat pump controller	**PWT**	Plate heat exchanger (for cooling)		
B92	Brine outlet temperature sensor	**Q2**	Heating circuit pump 1	**TWW**	Domestic hot water		

				DATE	03/2018
				DESIGNER	KAF
				Proved	SW
RESPONSIBLE	CHANGE	DATE	DESIGNER	Standard	SIA 410

OH Inverta Compact 02.20.10 E2 E6 E8 E42

Subject to technical changes.

- Installation of additional components as per local regulations and conditions.
- This presentation is used as planning aid for the concerned installer.

PROJECTproject STANDARD

NAME OF DRAWING OH_I_Compact

Anlage | Funktion | Seite 34

Project Manager PM

No. pgs. 106

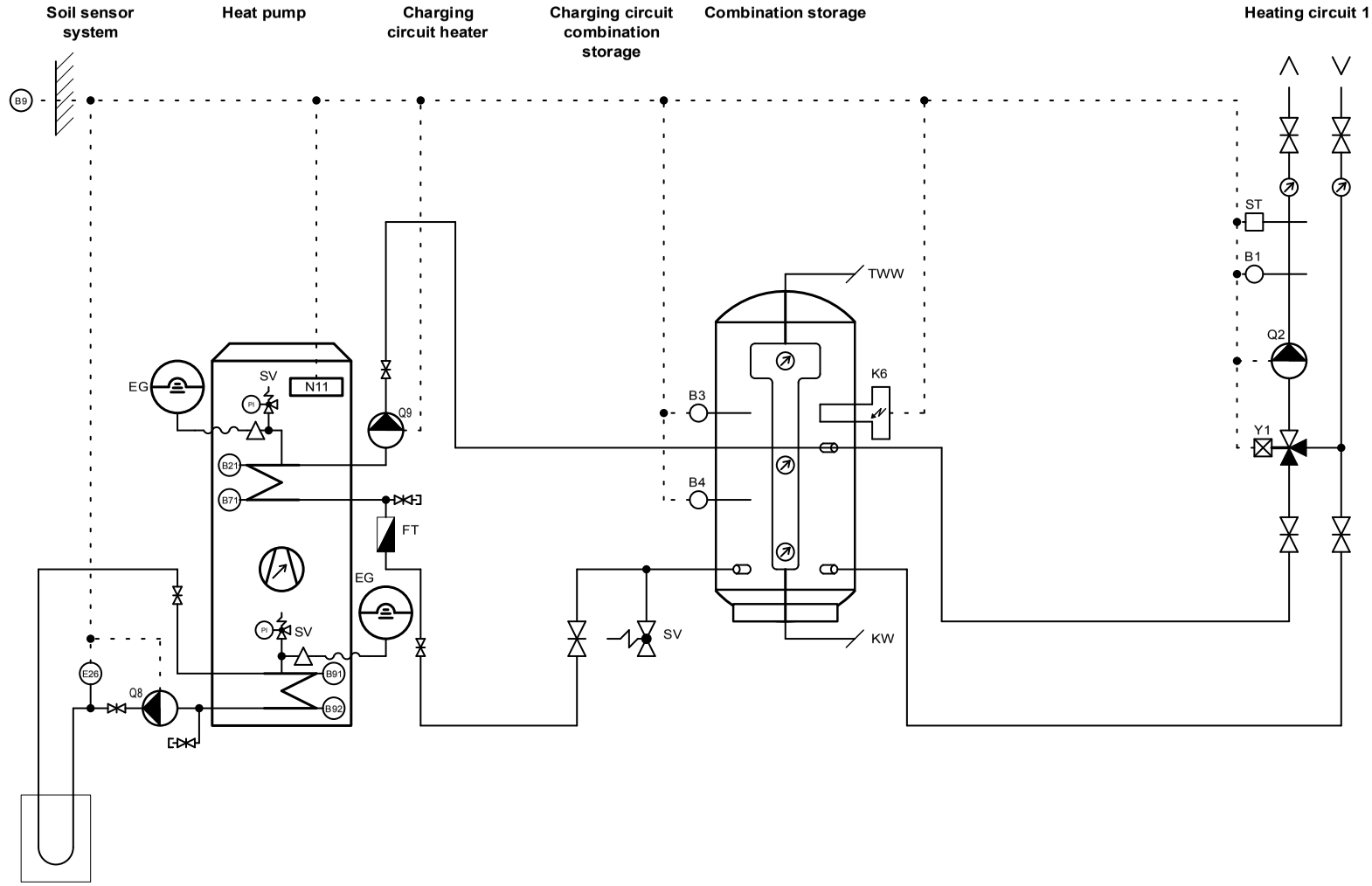

Legend

B1	Flow temperature sensor heating circuit	**K6**	Electrical heating element DHW (Power contactor+fuse in on-site tableau)	**RSV**	Non-return valve
B21	Flow temperature sensor heat pump			**SRV**	Balancing valve
B3	Domestic hot water temperature sensor			**TWW**	Domestic hot water
B4	Buffer storage temperature sensor			**Y1**	Heating circuit mixer 1
B71	Return flow temperature sensor heat pump				
B9	External temperature sensor	**N11**	Heat pump controller		
B91	Brine inlet temperature sensor	**PI**	Pressure gauge		
B92	Brine outlet temperature sensor	**Q2**	Heating circuit pump 1		
EG	Expansion vessel	**Q8**	Brine pump		
E26	Brine pressure controller	**Q9**	Condenser pump		
FT	Flow rate sensor	**ST**	Safety thermostat		
KW	Cold water	**SV**	Safety valve		

				DATE	03/2018
				DESIGNER	KAF
				Proved	SW
RESPONSIBLE	CHANGE	DATE	DESIGNER	Standard	SIA 410

OH Inverta Compact 02.30.10

Subject to technical changes.

- Installation of additional components as per local regulations and conditions.
- This presentation is used as planning aid for the concerned installer.

PROJECTproject STANDARD

NAME OF DRAWING OH_I_Compact

Anlage | Funktion | Seite 35

Project Manager PM

No. pgs. 106

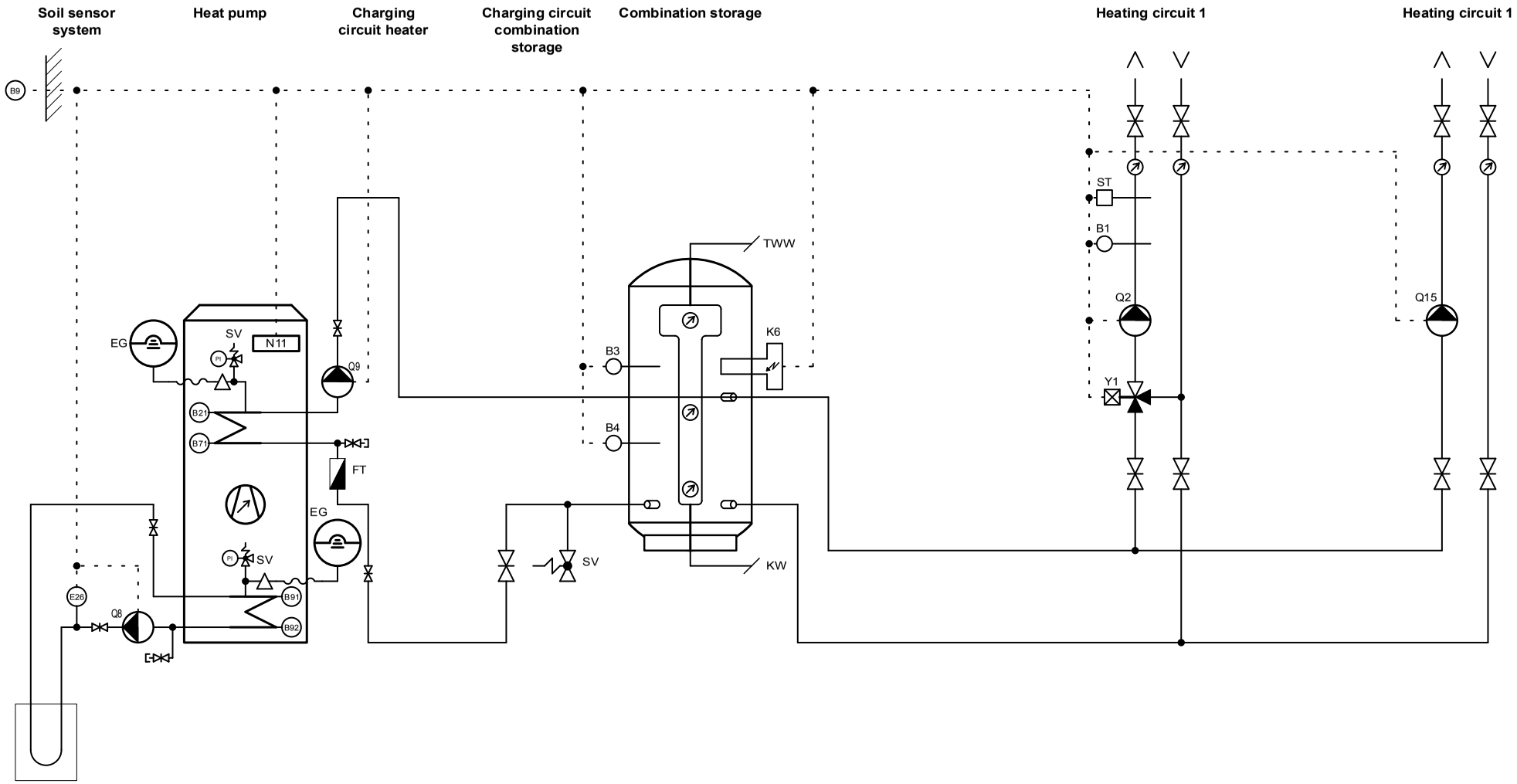

Legend

B1 Flow temperature sensor heating circuit
B21 Flow temperature sensor heat pump
B3 Domestic hot water temperature sensor
B4 Buffer storage temperature sensor
B71 Return flow temperature sensor heat pump
B9 External temperature sensor
B91 Brine inlet temperature sensor
B92 Brine outlet temperature sensor
EG Expansion vessel
E26 Brine pressure controller
FT Flow rate sensor
KW Cold water

K6 Electrical heating element DHW (Power contactor+fuse in on-site tableau)

N11 Heat pump controller
PI Pressure gauge
Q2 Heating circuit pump 1
Q8 Brine pump
Q9 Condenser pump
Q15 Heating circuit pump

ST Safety thermostat
SV Safety valve
RSV Non-return valve
SRV Balancing valve
TWW Domestic hot water
Y1 Heating circuit mixer 1

				DATE	03/2018
				DESIGNER	KAF
				Proved	SW
RESPONSIBLE	CHANGE	DATE	DESIGNER	Standard	SIA 410

OH Inverta Compact 02.30.10 E8

Subject to technical changes.

- Installation of additional components as per local regulations and conditions.
- This presentation is used as planning aid for the concerned installer.

PROJECTproject STANDARD
NAME OF DRAWING OH_I_Compact

Anlage | Funktion | Seite 36
Project Manager PM
No. pgs. 106

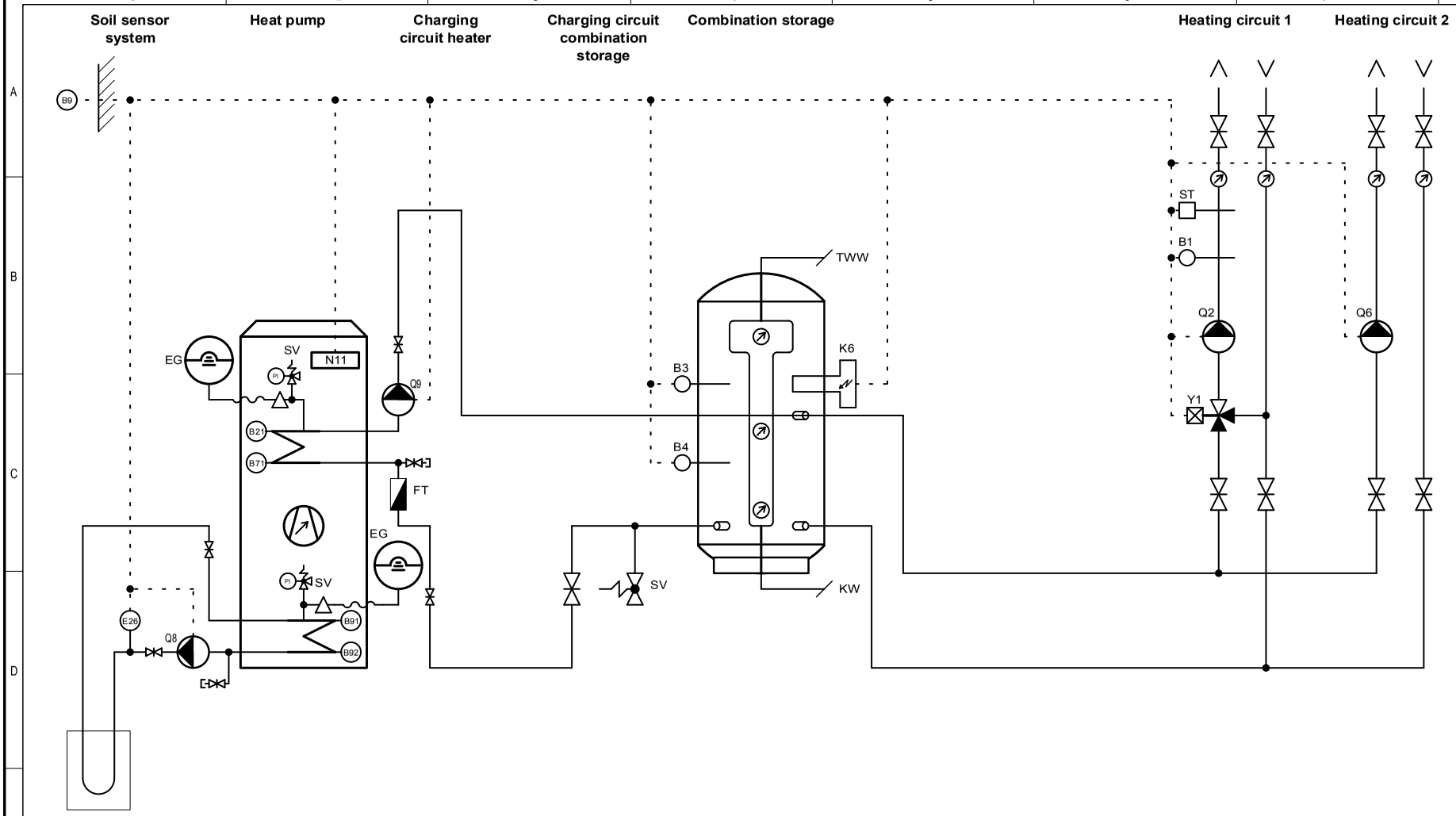

Legend

B1	Flow temperature sensor heating circuit	**K6**	Electrical heating element DHW (Power contactor+fuse in on-site tableau)	**SV**	Safety valve
B21	Flow temperature sensor heat pump			**RSV**	Non-return valve
B3	Domestic hot water temperature sensor			**SRV**	Balancing valve
B4	Buffer storage temperature sensor			**TWW**	Domestic hot water
B71	Return flow temperature sensor heat pump			**Y1**	Heating circuit mixer 1
B9	External temperature sensor	**N11**	Heat pump controller		
B91	Brine inlet temperature sensor	**PI**	Pressure gauge		
B92	Brine outlet temperature sensor	**Q2**	Heating circuit pump 1		
EG	Expansion vessel	**Q6**	Heating circuit pump 2		
E26	Brine pressure controller	**Q8**	Brine pump		
FT	Flow rate sensor	**Q9**	Condenser pump		
KW	Cold water	**ST**	Safety thermostat		

				DATE	03/2018
				DESIGNER	KAF
				Proved	SW
RESPONSIBLE	CHANGE	DATE	DESIGNER	Standard	SIA 410

OH Inverta Compact 02.30.10 E1

Subject to technical changes.

- Installation of additional components as per local regulations and conditions.
- This presentation is used as planning aid for the concerned installer.

PROJECTproject STANDARD

NAME OF DRAWING OH_I_Compact

Anlage | Funktion | Seite 37

Project Manager PM

No. pgs. 106

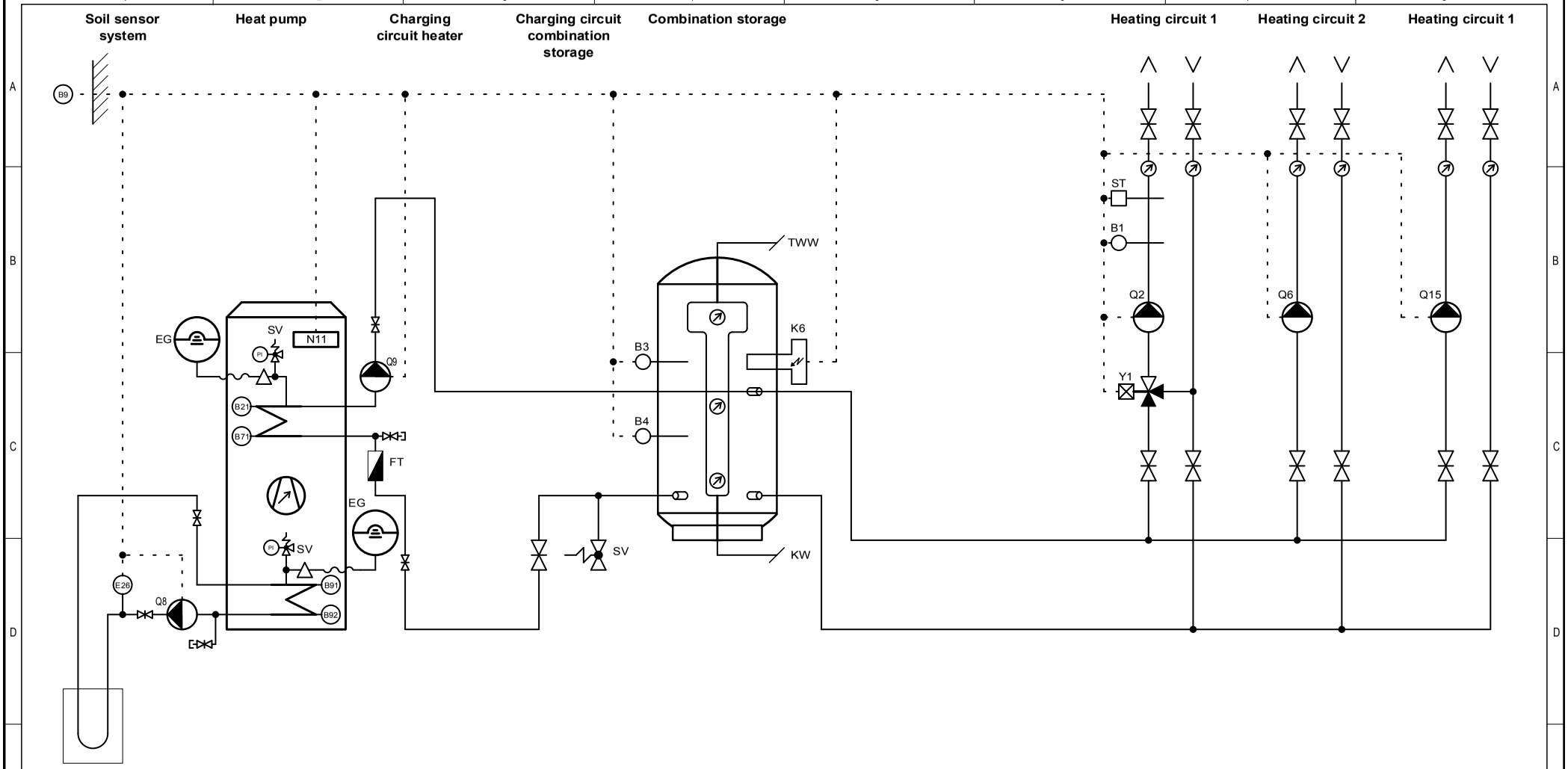

Legend

B1	Flow temperature sensor heating circuit	**K6**	Electrical heating element DHW (Power contactor+fuse in on-site tableau)	**ST**	Safety thermostat
B21	Flow temperature sensor heat pump			**SV**	Safety valve
B3	Domestic hot water temperature sensor			**RSV**	Non-return valve
B4	Buffer storage temperature sensor			**SRV**	Balancing valve
B71	Return flow temperature sensor heat pump			**TWW**	Domestic hot water
B9	External temperature sensor	**N11**	Heat pump controller	**Y1**	Heating circuit mixer 1
B91	Brine inlet temperature sensor	**PI**	Pressure gauge		
B92	Brine outlet temperature sensor	**Q2**	Heating circuit pump 1		
EG	Expansion vessel	**Q6**	Heating circuit pump 2		
E26	Brine pressure controller	**Q8**	Brine pump		
FT	Flow rate sensor	**Q9**	Condenser pump		
KW	Cold water	**Q15**	Heating circuit pump		

				DATE	03/2018
				DESIGNER	KAF
				Proved	SW
RESPONSIBLE	CHANGE	DATE	DESIGNER	Standard	SIA 410

OH Inverta Compact 02.30.10 E1 E8

Subject to technical changes.

- Installation of additional components as per local regulations and conditions.
- This presentation is used as planning aid for the concerned installer.

PROJECTproject STANDARD

NAME OF DRAWING OH_I_Compact

Anlage | Funktion | Seite 38

Project Manager PM

No. pgs. 106

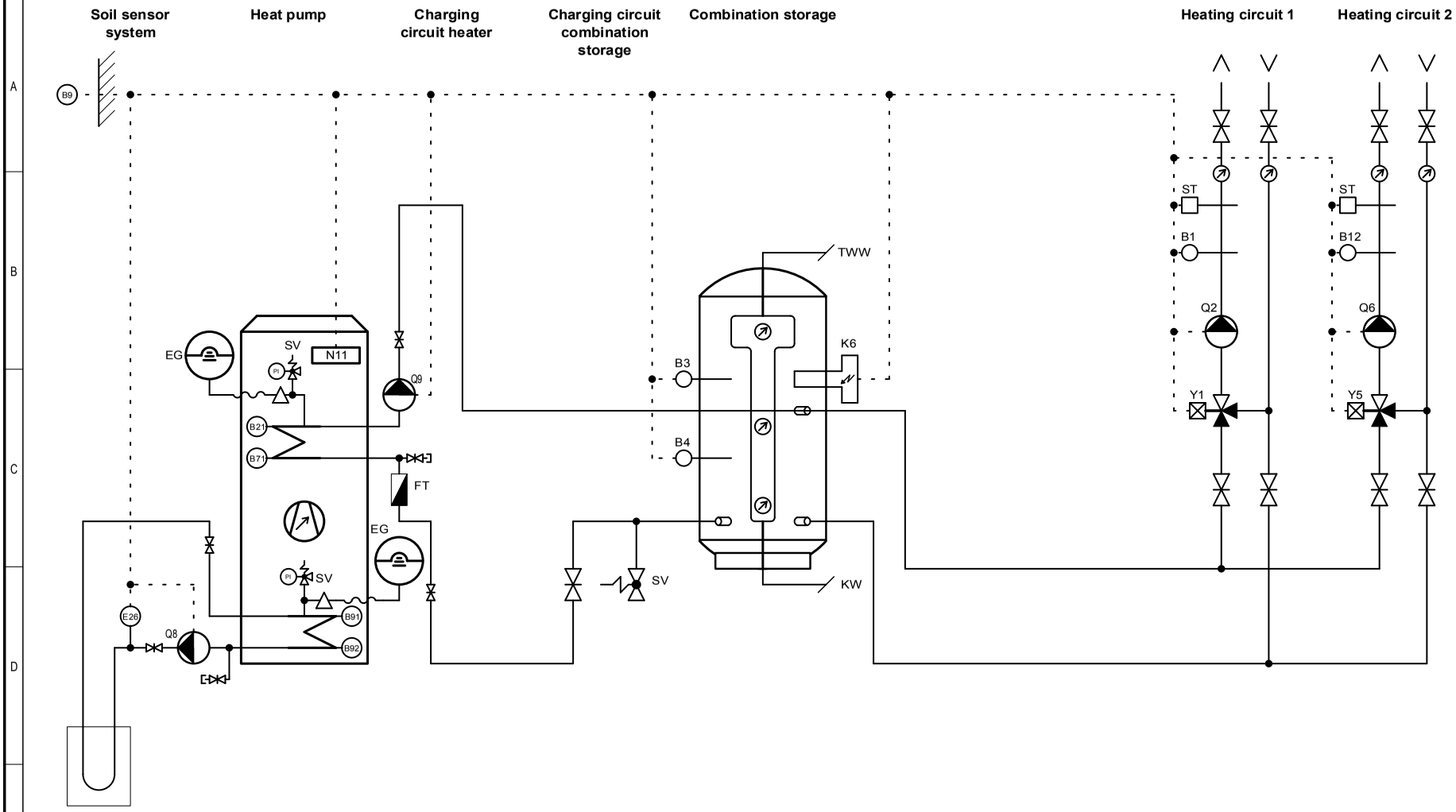

Legend

B1	Flow temperature sensor heating circuit	**KW**	Cold water	**ST**	Safety thermostat
B12	Flow temperature sensor heat pump	**K6**	Electrical heating element DHW (Power contactor+fuse in on-site tableau)	**SV**	Safety valve
B21	Flow temperature sensor heat pump			**RSV**	Non-return valve
B3	Domestic hot water temperature sensor			**SRV**	Balancing valve
B4	Buffer storage temperature sensor			**TWW**	Domestic hot water
B71	Return flow temperature sensor heat pump			**Y1**	Heating circuit mixer 1
B9	External temperature sensor	**N11**	Heat pump controller	**Y5**	Heating circuit mixer 2
B91	Brine inlet temperature sensor	**PI**	Pressure gauge		
B92	Brine outlet temperature sensor	**Q2**	Heating circuit pump 1		
EG	Expansion vessel	**Q6**	Heating circuit pump 2		
E26	Brine pressure controller	**Q8**	Brine pump		
FT	Flow rate sensor	**Q9**	Condenser pump		

				DATE	03/2018
				DESIGNER	KAF
				Proved	SW
RESPONSIBLE	CHANGE	DATE	DESIGNER	Standard	SIA 410

OH Inverta Compact 02.30.10 E2

Subject to technical changes.

- Installation of additional components as per local regulations and conditions.
- This presentation is used as planning aid for the concerned installer.

PROJECTproject STANDARD

NAME OF DRAWING OH_I_Compact

Anlage | Funktion | Seite 39

Project Manager PM

No. pgs. 106

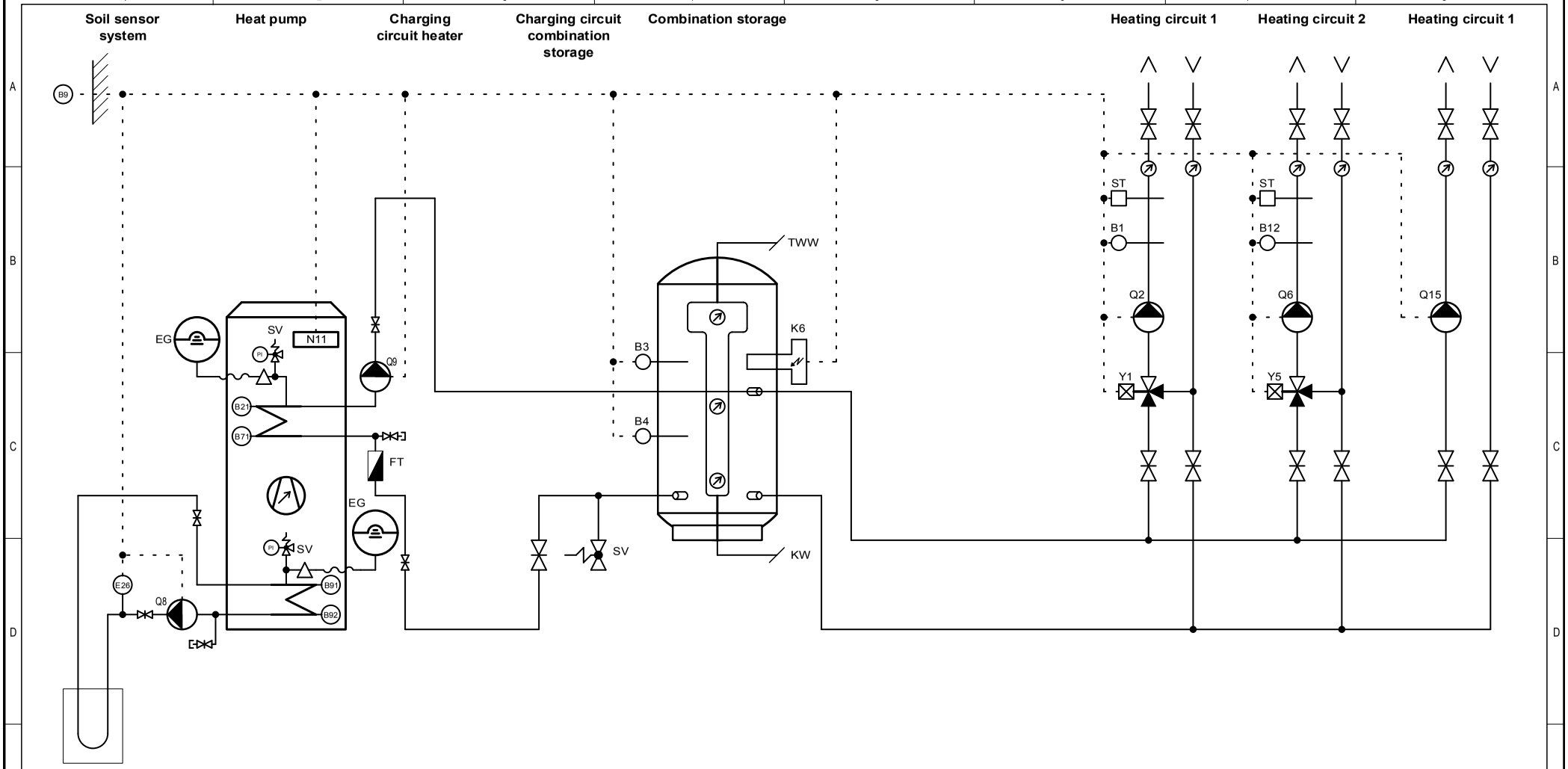

Legend

B1	Flow temperature sensor heating circuit	**KW**	Cold water	**Q15**	Heating circuit pump
B12	Flow temperature sensor heat pump	**K6**	Electrical heating element DHW (Power contactor+fuse in on-site tableau)	**ST**	Safety thermostat
B21	Flow temperature sensor heat pump			**SV**	Safety valve
B3	Domestic hot water temperature sensor			**RSV**	Non-return valve
B4	Buffer storage temperature sensor			**SRV**	Balancing valve
B71	Return flow temperature sensor heat pump			**TWW**	Domestic hot water
B9	External temperature sensor	**N11**	Heat pump controller	**Y1**	Heating circuit mixer 1
B91	Brine inlet temperature sensor	**PI**	Pressure gauge	**Y5**	Heating circuit mixer 2
B92	Brine outlet temperature sensor	**Q2**	Heating circuit pump 1		
EG	Expansion vessel	**Q6**	Heating circuit pump 2		
E26	Brine pressure controller	**Q8**	Brine pump		
FT	Flow rate sensor	**Q9**	Condenser pump		

RESPONSIBLE	CHANGE	DATE	DESIGNER		
				DATE	03/2018
				DESIGNER	KAF
				Proved	SW
				Standard	SIA 410

OH Inverta Compact 02.30.10 E2 E8

Subject to technical changes.

- Installation of additional components as per local regulations and conditions.
- This presentation is used as planning aid for the concerned installer.

PROJECTproject STANDARD

NAME OF DRAWING OH_I_Compact

Anlage | Funktion | Seite 40

Project Manager PM

No. pgs. 106

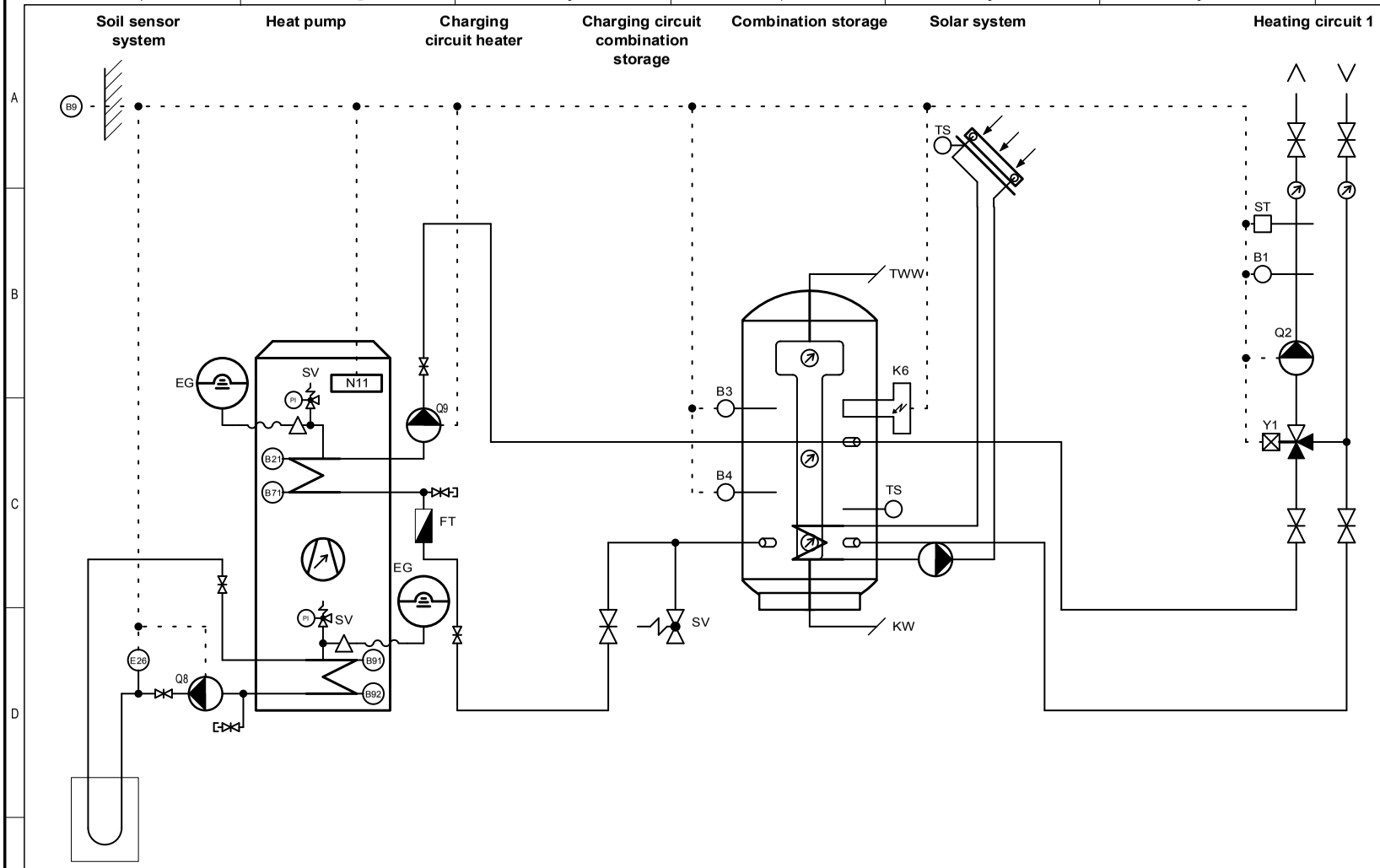

Legend

B1	Flow temperature sensor heating circuit	**K6**	Electrical heating element DHW (Power contactor+fuse in on-site tableau)	**TS**	Solar sensor
B21	Flow temperature sensor heat pump			**TWW**	Domestic hot water
B3	Domestic hot water temperature sensor			**Y1**	Heating circuit mixer 1
B4	Buffer storage temperature sensor				
B71	Return flow temperature sensor heat pump				
B9	External temperature sensor	**N11**	Heat pump controller		**Solar system on-site, independent of control by the heat pump.**
B91	Brine inlet temperature sensor	**PI**	Pressure gauge		
B92	Brine outlet temperature sensor	**Q2**	Heating circuit pump 1		
EG	Expansion vessel	**Q8**	Brine pump		
E26	Brine pressure controller	**Q9**	Condenser pump		
FT	Flow rate sensor	**RSV**	Non-return valve		
KW	Cold water	**SV**	Safety valve		

				DATE	03/2018
				DESIGNER	KAF
				Proved	SW
RESPONSIBLE	CHANGE	DATE	DESIGNER	Standard	SIA 410

OH Inverta Compact 02.40.10

Subject to technical changes.

- Installation of additional components as per local regulations and conditions.
- This presentation is used as planning aid for the concerned installer.

PROJECTproject STANDARD

NAME OF DRAWING OH_I_Compact

Anlage | Funktion | Seite 41

Project Manager PM

No. pgs. 106

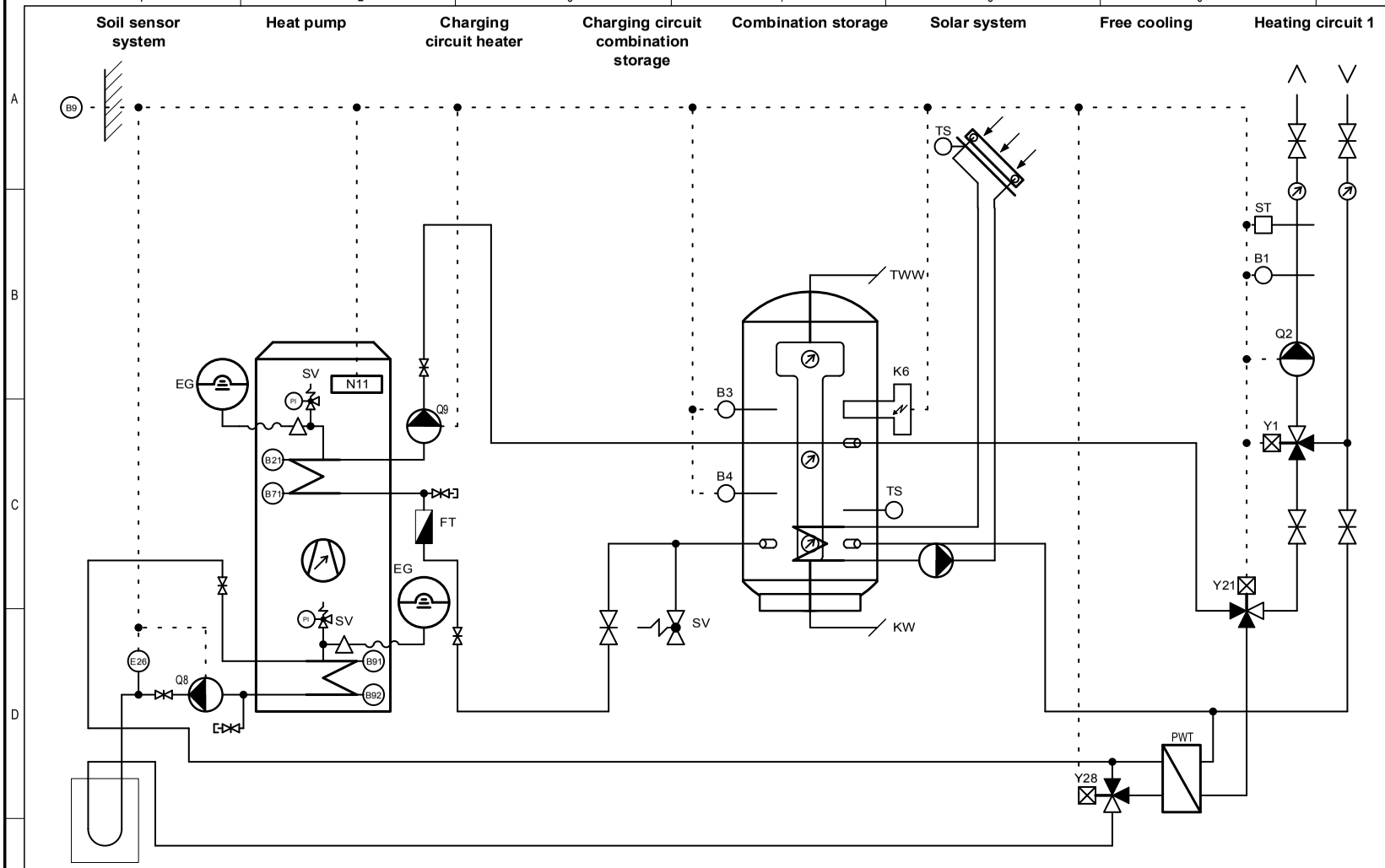

Legend

B1 Flow temperature sensor heating circuit
B21 Flow temperature sensor heat pump
B3 Domestic hot water temperature sensor
B4 Buffer storage temperature sensor
B41 Buffer storage temp. sensor bottom (option)
B71 Return flow temperature sensor heat pump
B9 External temperature sensor
B91 Brine inlet temperature sensor
B92 Brine outlet temperature sensor
EG Expansion vessel
E26 Brine pressure controller
FT Flow rate sensor

K6 Electrical heating element DHW (Power contactor+fuse in on-site tableau)

N11 Heat pump controller
PI Pressure gauge
PWT Plate heat exchanger (for cooling)
Q2 Heating circuit pump 1
Q8 Brine pump
Q9 Condenser pump
TS Solar sensor

TWW Domestic hot water
SV Safety valve
Y1 Heating circuit mixer 1
Y21 Deflector valve 230 V heating circuit
Y28 Deflector valve 230 V source side

Solar system on-site, independent of control by the heat pump.

				DATE	03/2018
				DESIGNER	KAF
				Proved	SW
RESPONSIBLE	CHANGE	DATE	DESIGNER	Standard	SIA 410

OH Inverta Compact 02.40.10 E6

Subject to technical changes.

- Installation of additional components as per local regulations and conditions.
- This presentation is used as planning aid for the concerned installer.

PROJECTproject STANDARD
NAME OF DRAWING OH_I_Compact

Anlage | Funktion | Seite 42
Project Manager PM
No. pgs. 106

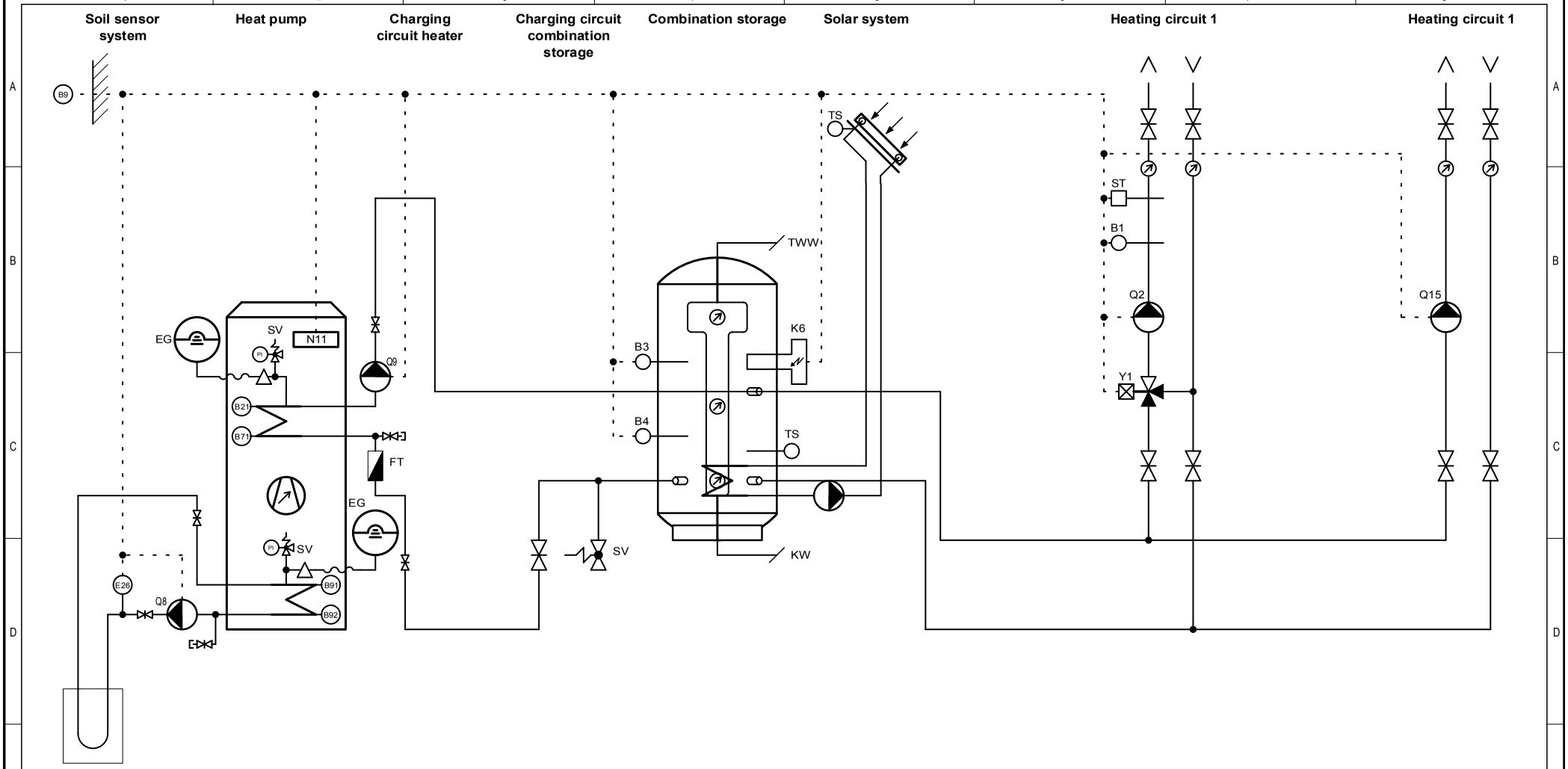

Legend

B1	Flow temperature sensor heating circuit	**K6**	Electrical heating element DHW (Power contactor+fuse in on-site tableau)	**SV**	Safety valve
B21	Flow temperature sensor heat pump			**TS**	Solar sensor
B3	Domestic hot water temperature sensor			**TWW**	Domestic hot water
B4	Buffer storage temperature sensor			**Y1**	Heating circuit mixer 1
B71	Return flow temperature sensor heat pump				
B9	External temperature sensor	**N11**	Heat pump controller		
B91	Brine inlet temperature sensor	**PI**	Pressure gauge		
B92	Brine outlet temperature sensor	**Q2**	Heating circuit pump 1		
EG	Expansion vessel	**Q8**	Brine pump		
E26	Brine pressure controller	**Q9**	Condenser pump		
FT	Flow rate sensor	**Q15**	Heating circuit pump		
KW	Cold water	**RSV**	Non-return valve		

Solar system on-site, independent of control by the heat pump.

				DATE	03/2018
				DESIGNER	KAF
				Proved	SW
RESPONSIBLE	CHANGE	DATE	DESIGNER	Standard	SIA 410

OH Inverta Compact 02.40.10 E8

Subject to technical changes.

- Installation of additional components as per local regulations and conditions.
- This presentation is used as planning aid for the concerned installer.

PROJECTproject STANDARD

NAME OF DRAWING OH_I_Compact

Anlage | Funktion | Seite 43

Project Manager PM

No. pgs. 106

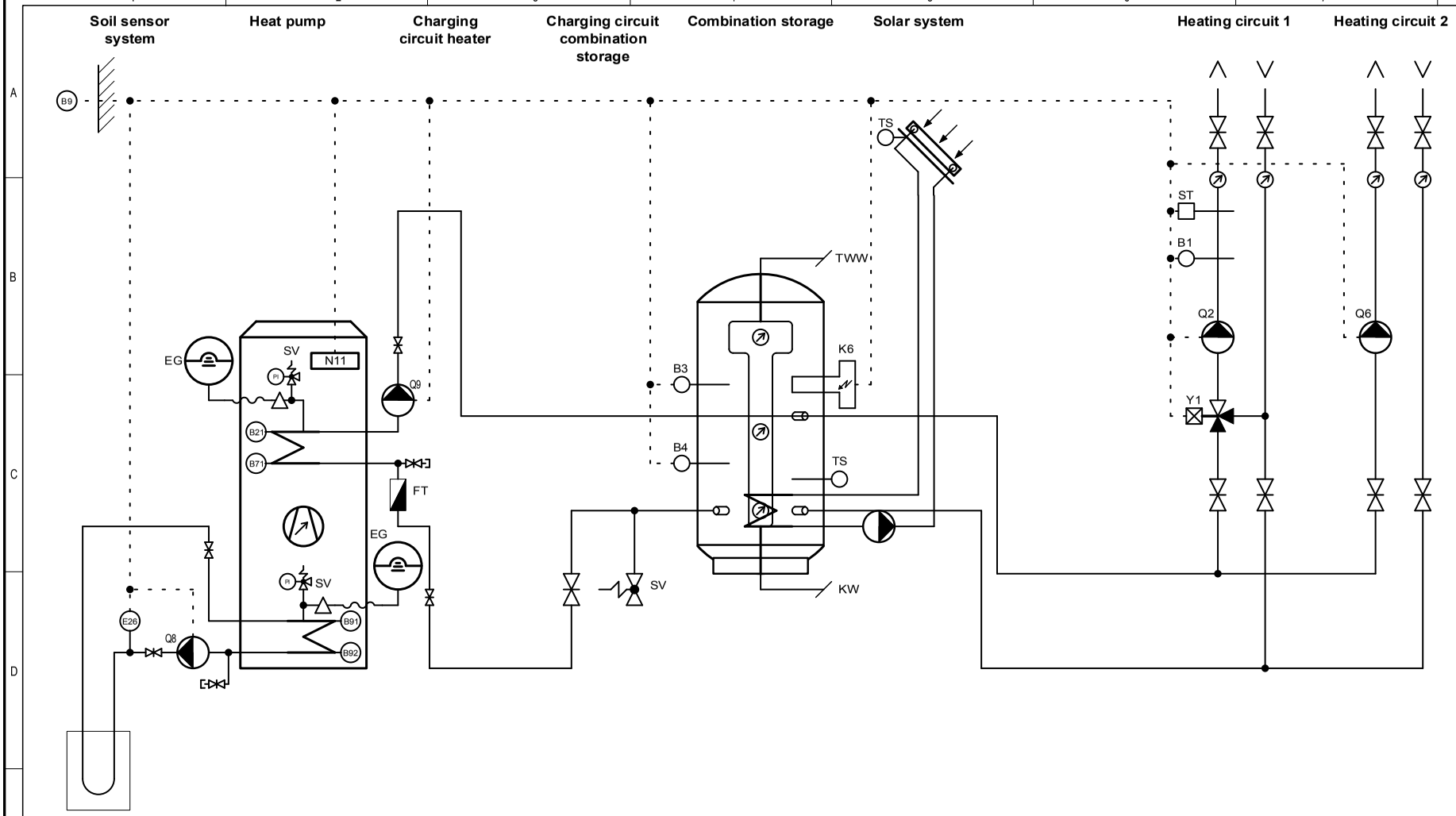

Legend

B1 Flow temperature sensor heating circuit
B21 Flow temperature sensor heat pump
B3 Domestic hot water temperature sensor
B4 Buffer storage temperature sensor
B71 Return flow temperature sensor heat pump
B9 External temperature sensor
B91 Brine inlet temperature sensor
B92 Brine outlet temperature sensor
EG Expansion vessel
E26 Brine pressure controller
FT Flow rate sensor
KW Cold water

K6 Electrical heating element DHW (Power contactor+fuse in on-site tableau)

N11 Heat pump controller
PI Pressure gauge
Q2 Heating circuit pump 1
Q6 Heating circuit pump 2
Q8 Brine pump
Q9 Condenser pump
RSV Non-return valve

SV Safety valve
TS Solar sensor
TWW Domestic hot water
Y1 Heating circuit mixer 1

Solar system on-site, independent of control by the heat pump.

				DATE	03/2018
				DESIGNER	KAF
				Proved	SW
RESPONSIBLE	CHANGE	DATE	DESIGNER	Standard	SIA 410

OH Inverta Compact 02.40.10 E1

Subject to technical changes.

- Installation of additional components as per local regulations and conditions.
- This presentation is used as planning aid for the concerned installer.

PROJECTproject STANDARD
NAME OF DRAWING OH_I_Compact

Anlage | Funktion | Seite 44
Project Manager PM
No. pgs. 106

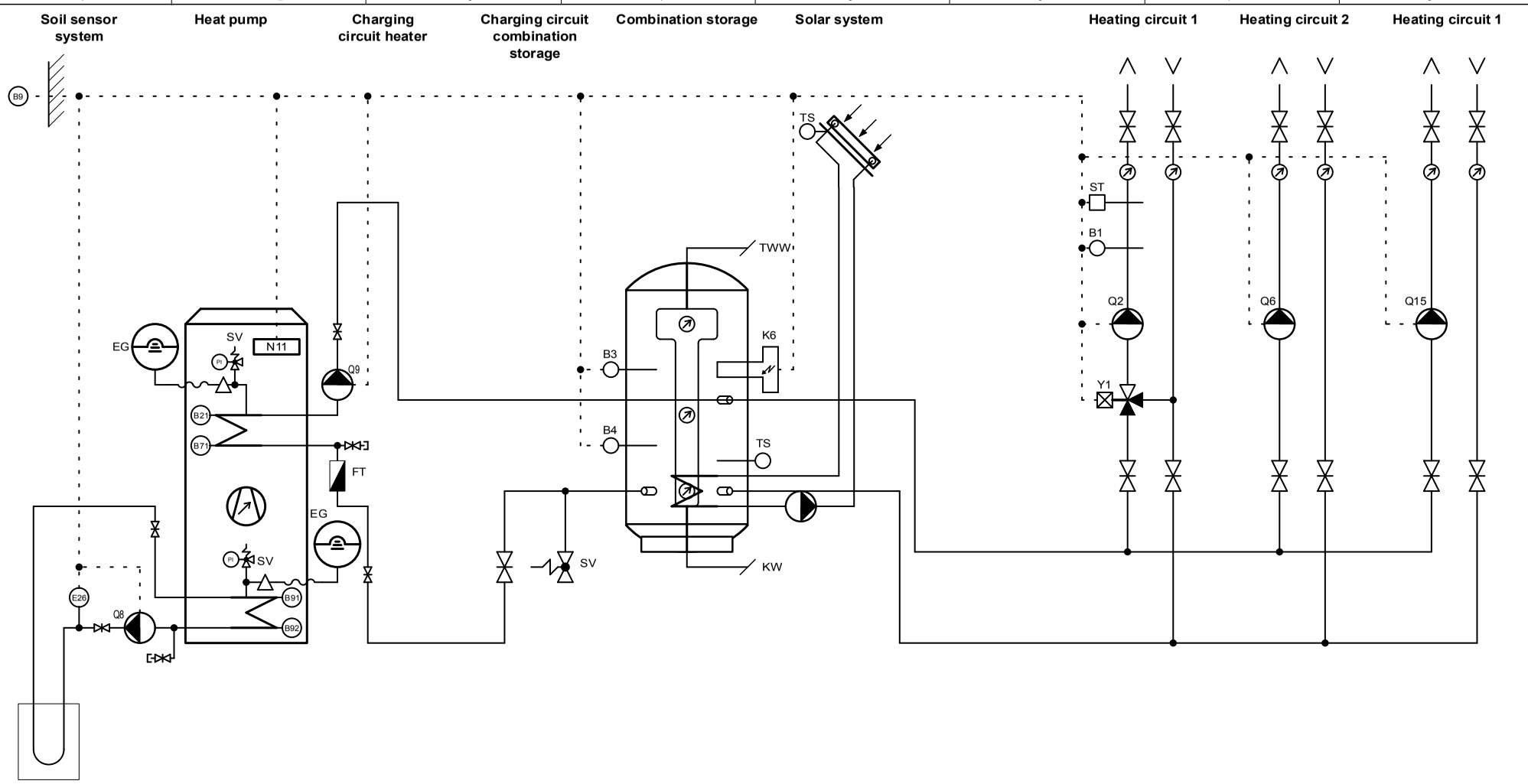

Legend

B1 Flow temperature sensor heating circuit
B21 Flow temperature sensor heat pump
B3 Domestic hot water temperature sensor
B4 Buffer storage temperature sensor
B71 Return flow temperature sensor heat pump
B9 External temperature sensor
B91 Brine inlet temperature sensor
B92 Brine outlet temperature sensor
EG Expansion vessel
E26 Brine pressure controller
FT Flow rate sensor
KW Cold water

K6 Electrical heating element DHW (Power contactor+fuse in on-site tableau)

N11 Heat pump controller
PI Pressure gauge
Q2 Heating circuit pump 1
Q6 Heating circuit pump 2
Q8 Brine pump
Q9 Condenser pump
Q15 Heating circuit pump

RSV Non-return valve
SV Safety valve
TS Solar sensor
TWW Domestic hot water
Y1 Heating circuit mixer 1

Solar system on-site, independent of control by the heat pump.

				DATE	03/2018
				DESIGNER	KAF
				Proved	SW
RESPONSIBLE	CHANGE	DATE	DESIGNER	Standard	SIA 410

OH Inverta Compact 02.40.10 E1 E8

Subject to technical changes.

- Installation of additional components as per local regulations and conditions.
- This presentation is used as planning aid for the concerned installer.

PROJECTproject STANDARD
NAME OF DRAWING OH_I_Compact

Anlage | Funktion | Seite 45
Project Manager PM
No. pgs. 106

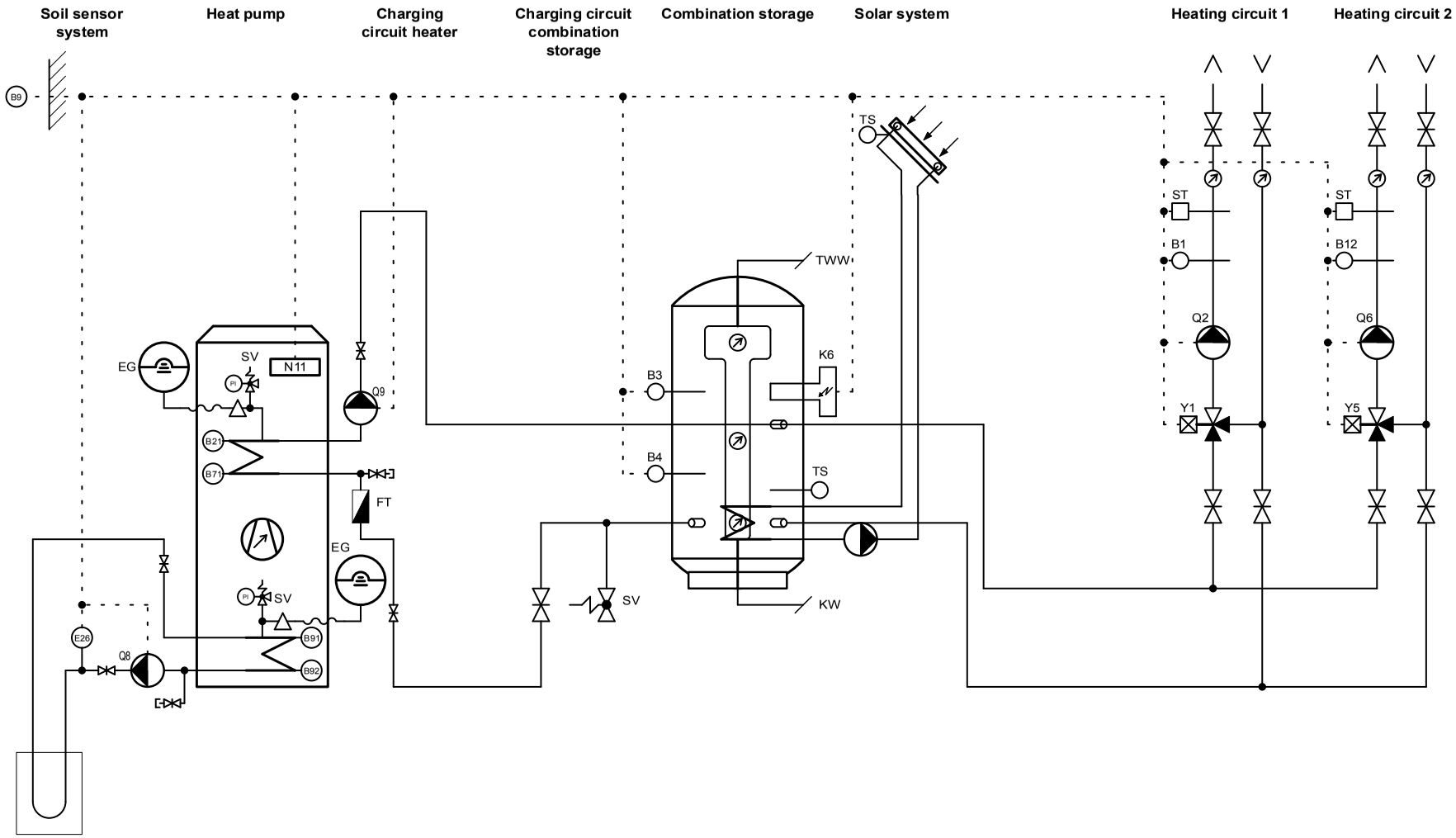

Legend

B1 Flow temperature sensor heating circuit
B12 Flow temp. sensor heating circuit 2
B21 Flow temperature sensor heat pump
B3 Domestic hot water temperature sensor
B4 Buffer storage temperature sensor
B71 Return flow temperature sensor heat pump
B9 External temperature sensor
B91 Brine inlet temperature sensor
B92 Brine outlet temperature sensor
EG Expansion vessel
E26 Brine pressure controller
FT Flow rate sensor

KW Cold water
K6 Electrical heating element DHW (Power contactor+fuse in on-site tableau)

N11 Heat pump controller
PI Pressure gauge
Q2 Heating circuit pump 1
Q6 Heating circuit pump 2
Q8 Brine pump
Q9 Condenser pump

RSV Non-return valve
SV Safety valve
TS Solar sensor
TWW Domestic hot water
Y1 Heating circuit mixer 1
Y5 Heating circuit mixer 2

Solar system on-site, independent of control by the heat pump.

				DATE	03/2018
				DESIGNER	KAF
				Proved	SW
RESPONSIBLE	CHANGE	DATE	DESIGNER	Standard	SIA 410

OH Inverta Compact 02.40.10 E2

Subject to technical changes.

- Installation of additional components as per local regulations and conditions.
- This presentation is used as planning aid for the concerned installer.

PROJECTproject STANDARD
NAME OF DRAWING OH_I_Compact

Anlage | Funktion | Seite 46
Project Manager PM
No. pgs. 106

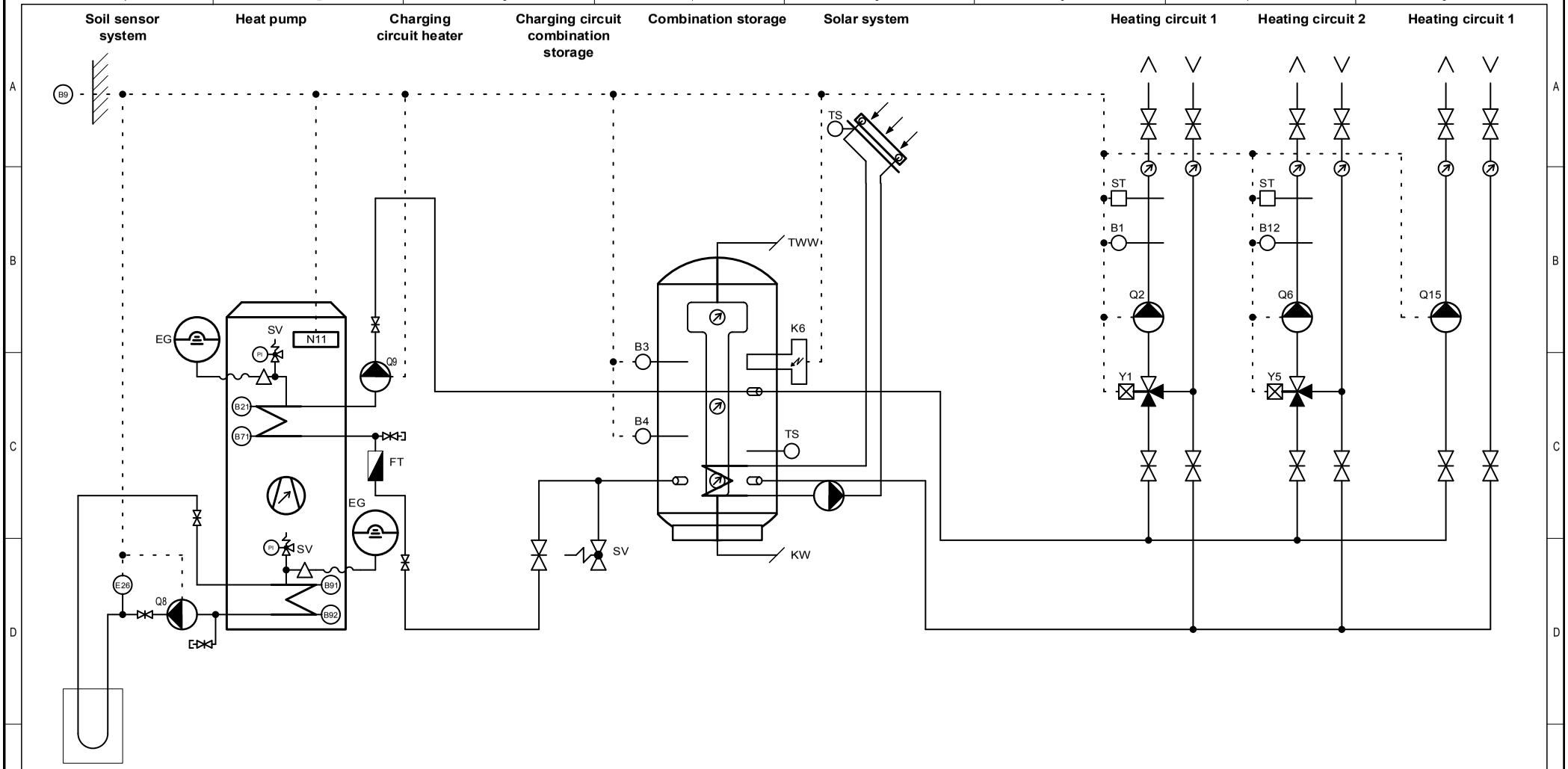

Legend

B1 Flow temperature sensor heating circuit
B12 Flow temp. sensor heating circuit 2
B21 Flow temperature sensor heat pump
B3 Domestic hot water temperature sensor
B4 Buffer storage temperature sensor
B71 Return flow temperature sensor heat pump
B9 External temperature sensor
B91 Brine inlet temperature sensor
B92 Brine outlet temperature sensor
EG Expansion vessel
E26 Brine pressure controller
FT Flow rate sensor

KW Cold water
K6 Electrical heating element DHW (Power contactor+fuse in on-site tableau)

N11 Heat pump controller
PI Pressure gauge
Q2 Heating circuit pump 1
Q6 Heating circuit pump 2
Q8 Brine pump
Q9 Condenser pump

Q15 Heating circuit pump
RSV Non-return valve
SV Safety valve
TS Solar sensor
TWW Domestic hot water
Y1 Heating circuit mixer 1
Y5 Heating circuit mixer 2

Solar system on-site, independent of control by the heat pump.

				DATE	03/2018
				DESIGNER	KAF
				Proved	SW
RESPONSIBLE	CHANGE	DATE	DESIGNER	Standard	SIA 410

OH Inverta Compact 02.40.10 E2 E8

Subject to technical changes.

- Installation of additional components as per local regulations and conditions.
- This presentation is used as planning aid for the concerned installer.

PROJECTproject STANDARD
NAME OF DRAWING OH_I_Compact

Anlage | Funktion | Seite 47
Project Manager PM
No. pgs. 106

CTA AG

Hunzigenstrasse 2

CH-3110 Münsingen

www.cta.ch

06/2022 Item no. TD32007